REVISIONS			
RE	DESCRIPTION	DATE	APPD
A	INITIAL RELEASE PER ECN 8036	2/13/14	MC

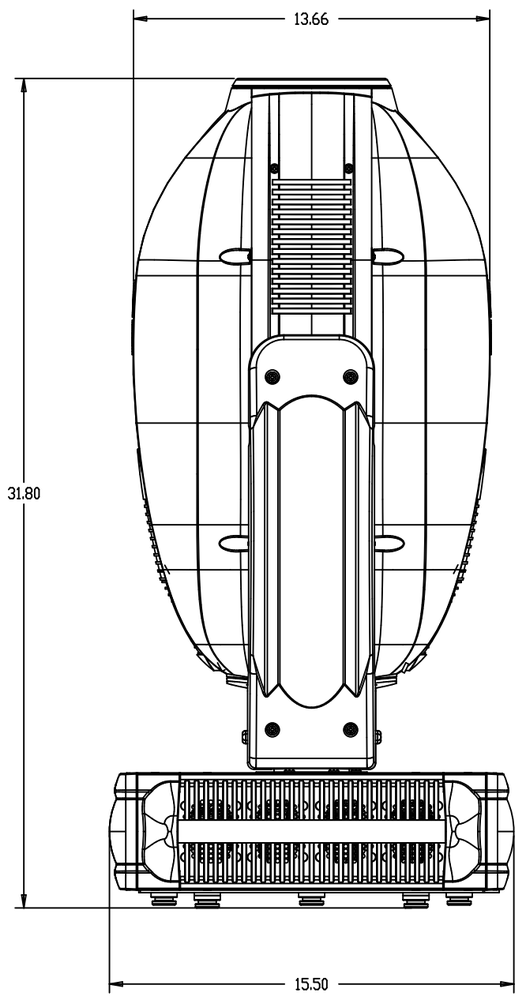

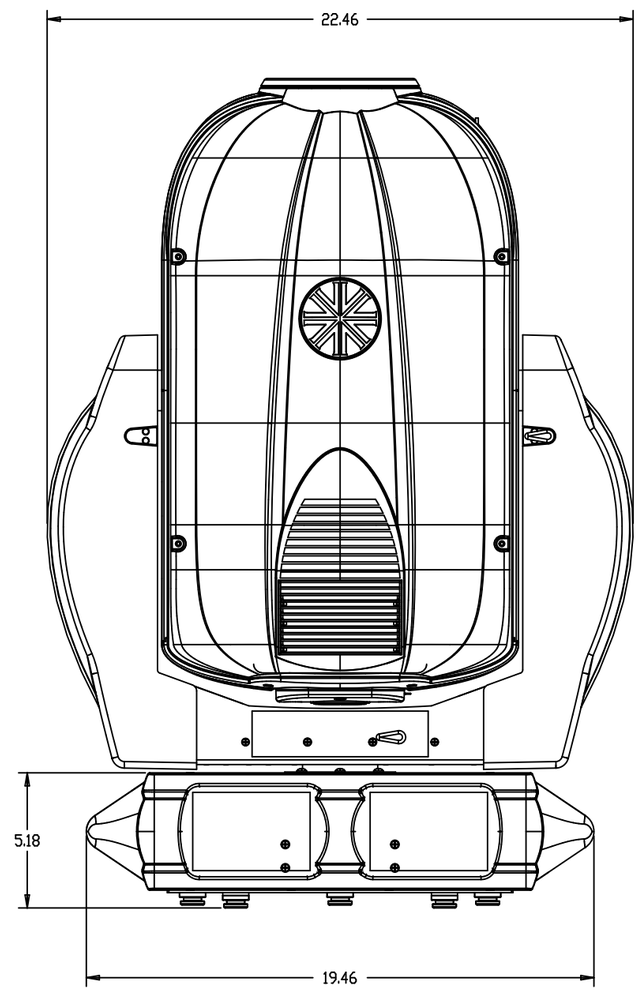

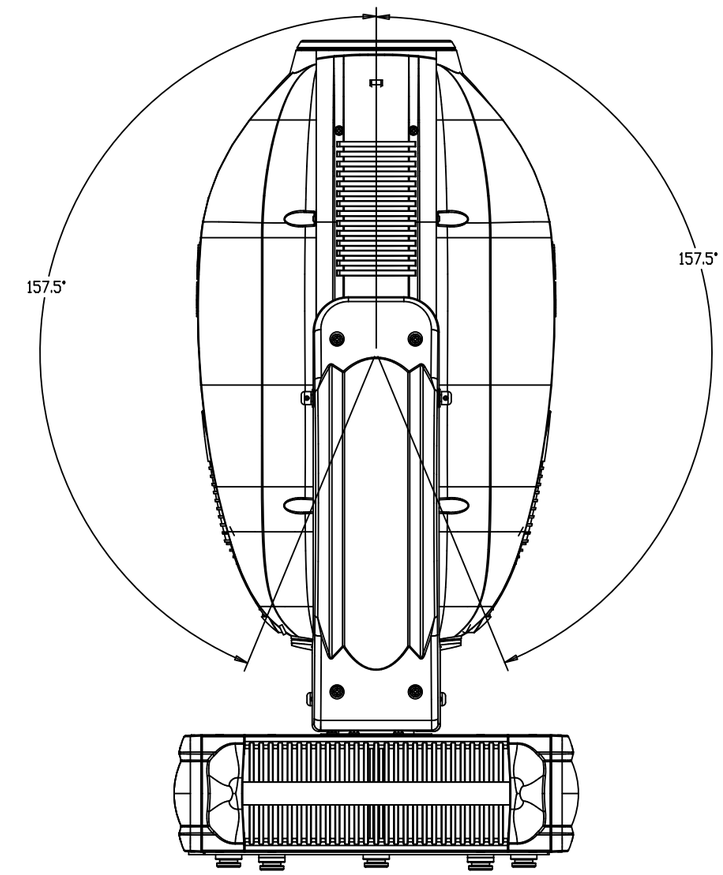

TILT TRAVEL LIMITS

NOTE:

GC SPECS: ALL MATERIAL PROTOTYPES, ARTICLE SAMPLES, AND PRODUCTION LOTS ARE TO BE DELIVERED IN CONFORMANCE TO USE OF THE FOLLOWING PHILIPS DOCUMENTS: QDP-0101 & GC-QA-F033

NEXT ASSY

TOLERANCE TABLE: ANGLE X°= ± 0.50; X.XX = ± 0.020; X.XXX = ± 0.010

PHILIPS VARILITE 10911 PETAL ST., DALLAS, TX 75238

MATERIAL

FINISH

DSN

DWN MC 2/13/14

MATERIALS, PARTS AND PRODUCTS MUST COMPLY WITH THE ENVIRONMENTAL REQUIREMENTS SPECIFIED IN QDP-0101

INCHES UNLESS NOTED OTHERWISE. REMOVE ALL BURRS AND SHARP EDGES.

NOTICE:
INFORMATION AND DESIGN DISCLOSED ON THIS DOCUMENT ARE CONSIDERED PROPRIETARY AND SHALL NOT BE REPRODUCED OR DISCLOSED WITHOUT WRITTEN CONSENT.
PHILIPS VARILITE
ALL RIGHTS RESERVED

OUTLINE DIMENSION DRAWING, VERTICAL HEAD, VL4000

SIZE	REVISION	DRAWING NUMBER
D	A	16-9704-0001

SCALE 0.38 | PRO/ENGINEER | SHEET 1 OF 1

REVISIONS			
RE	DESCRIPTION	DATE	APPD
A	INITIAL RELEASE PER ECN 8036	2/18/14	MC

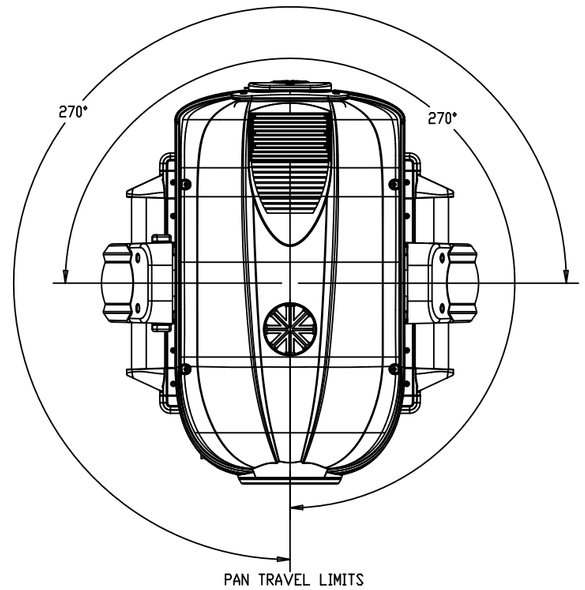

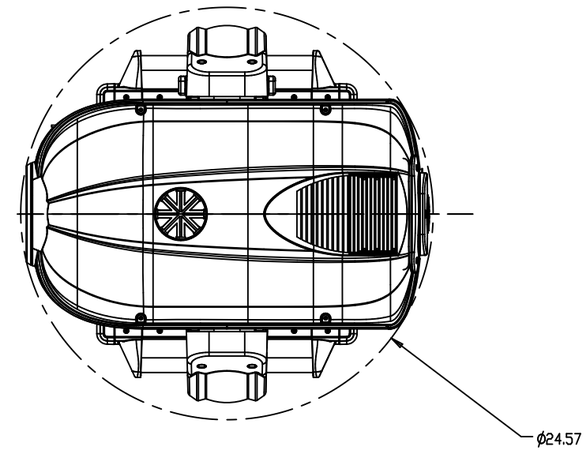

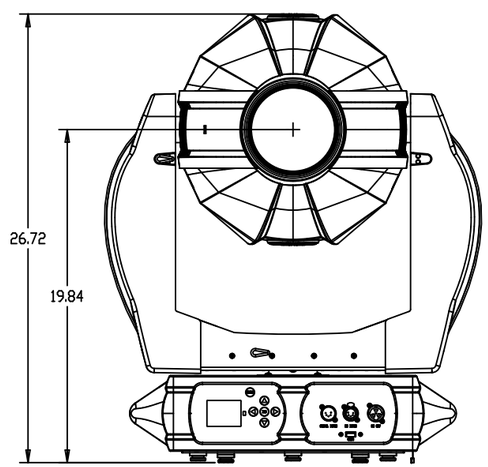

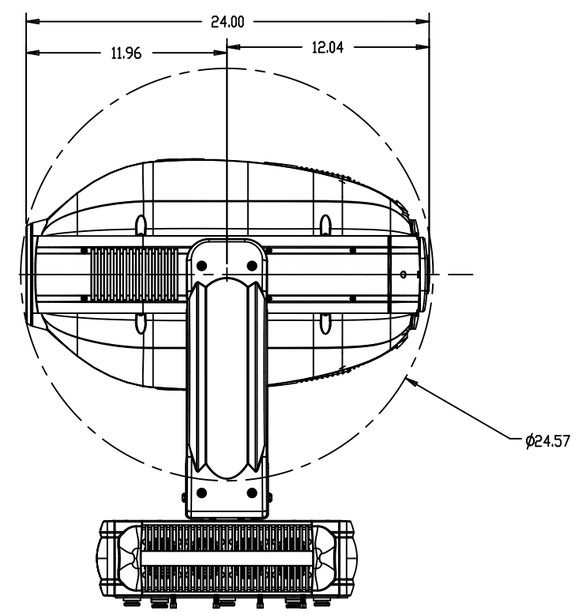

NOTE:

GC SPECS: ALL MATERIAL PROTOTYPES, ARTICLE SAMPLES, AND PRODUCTION LOTS ARE TO BE DELIVERED IN CONFORMANCE TO USE OF THE FOLLOWING PHILIPS DOCUMENTS: QDP-0101 & GC-QA-F033

NEXT ASSY

TOLERANCE TABLE: ANGLE; X°= ± 0.50; X.XX = ± 0.020; X.XXX = ± 0.010

PHILIPS VARILITE 10911 PETAL ST., DALLAS, TX 75238

MATERIAL

DSN

DWN MC 10/21/13

FINISH

MATERIALS, PARTS AND PRODUCTS MUST COMPLY WITH THE ENVIRONMENTAL

REQUIRE DIMENSIONS ARE IN INCHES UNLESS NOTED OTHERWISE. REMOVE ALL BURRS AND SHARP EDGES.

OUTLINE DIMENSION DRAWING, HORIZONTAL HEAD, VL4000

SIZE	REVISION	DRAWING NUMBER
D	A	16-9704-0002

SCALE 0.25 PRO/ENGINEER SHEET 1 OF 1

NOTICE:
INFORMATION AND DESIGN DISCLOSED IN THIS DOCUMENT ARE CONSIDERED PROPRIETARY AND SHALL NOT BE REPRODUCED OR DISCLOSED WITHOUT WRITTEN CONSENT.
PHILIPS VARILITE
ALL RIGHTS RESERVED