ADVANCE TRANSFORMER CO.	High Pressure Sodium Lamp Ballast	Catalog Number 71A79H8A For 70W S62 60 Hz CWA Status: Active

DIMENSIONS AND DATA

3 X 4 CORE - 2 COIL UNIT

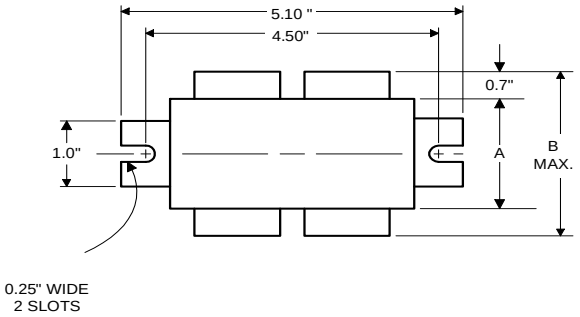

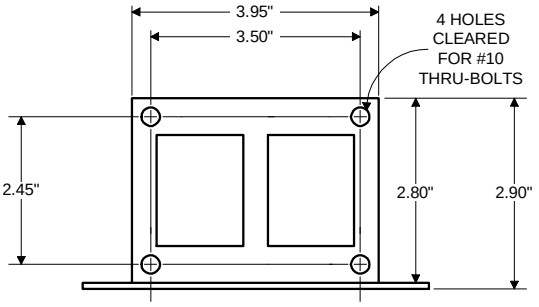

INPUT VOLTS		127	220			
CIRCUIT TYPE	CWA					
POWER FACTOR (min)	90%					
REGULATION						
Line Volts	±10%					
Lamp Watts	±10%					
LINE CURRENT (Amps)						
Operating		0.80	0.47			
Open Circuit		0.20	0.12			
Starting		0.81	0.48			
UL TEMPERATURE RATINGS						
Insulation Class	H(180℃)					
Coil Temperature Code	1029	B	C			
MIN. AMBIENT STARTING TEMP.	-40℉ or -40℃					
NOM. OPEN CIRCUIT VOLTAGE	108					
INPUT VOLTAGE AT LAMP DROPOUT		95	165			
INPUT WATTS	100					
RECOMMENDED FUSE (Amps)		2	2			
CORE and COIL						
Dimension (A)	1.75					
Dimension (B)	3.36					
Weight (lbs.)	5.1					
Lead Lengths	12"					
CAPACITOR REQUIREMENT						
Microfarads	32.5					
Volts (min.)	150					
Fault Current Withstand (amps)						
60 Hz TEST PROCEDURES (Refer to Advance Test Procedure for HID Ballasts - Form 1270)						
High Potential Test (Volts)						
1 minute	2000					
2 seconds	2500					
Open Circuit Voltage Test (Volts)	95-115					
Short-Circuit Current Test (Amps)						
Secondary Current	2.00-2.60					
Input Current		0.68-1.13	0.40-0.66	-	-	-

Capacitor: 7C325P30RA

Capacitance:	32.5
Dia/Oval Dim:	1.85
Height:	3.7
Temp Rating:	105℃

Wiring Diagram:

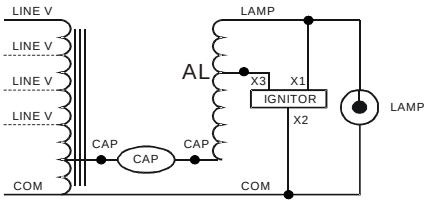

Fig. M7

Ignitor: LI551-J4

Red (X1)
White (X2)
Blue (X3)

Ballast to Lamp Distance
(BTL) = 2 feet
Temp Rating: 105℃

Ordering Information

Order Suffix	Description

Data is based upon tests performed by Advance Transformer in a controlled environment and representitive of relative performance.
Actual performance can vary depending on operating conditions. Specifications are subject to change without notice.

ADVANCE TRANSFORMER CO.
O'HARE INTERNATIONAL CENTER · 10275 WEST HIGGINS ROAD · ROSEMONT, IL 60018
Customer Support/Technical Service: Phone: 800-372-3331 · Fax: 847-768-7768
Corporate Offices: Phone: 800-322-2086

04/20/12