ADVANCE TRANSFORMER CO.	High Pressure Sodium Lamp Ballast	Catalog Number 71A8743T For 1000W S52 60 Hz CWA Status: Active

DIMENSIONS AND DATA

4 1/4 X 6 CORE - 2 COIL UNIT

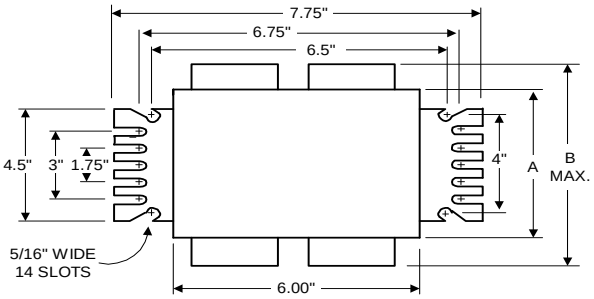

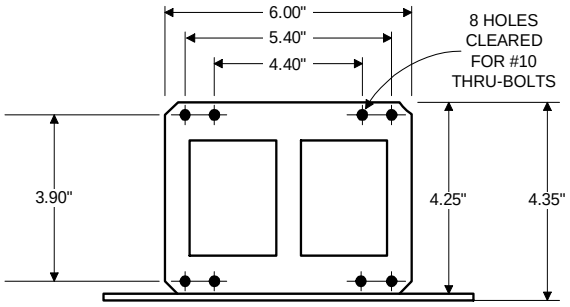

INPUT VOLTS		480				
CIRCUIT TYPE	CWA					
POWER FACTOR (min)	90%					
REGULATION						
Line Volts	±10%					
Lamp Watts	WITHIN TRAPEZOID					
LINE CURRENT (Amps)						
Operating		2.30				
Open Circuit		0.90				
Starting		1.60				
UL TEMPERATURE RATINGS						
Insulation Class	H(180℃)					
Coil Temperature Code	1029	C				
MIN. AMBIENT STARTING TEMP.	-40℉ or -40℃					
NOM. OPEN CIRCUIT VOLTAGE	435					
INPUT VOLTAGE AT LAMP DROPOUT		360				
INPUT WATTS	1100					
RECOMMENDED FUSE (Amps)		6				
CORE and COIL						
Dimension (A)	3.90					
Dimension (B)	5.90					
Weight (lbs.)	28					
Lead Lengths	12"					
CAPACITOR REQUIREMENT						
Microfarads	26.0					
Volts (min.)	525					
Fault Current Withstand (amps)						
60 Hz TEST PROCEDURES (Refer to Advance Test Procedure for HID Ballasts - Form 1270)						
High Potential Test (Volts)						
1 minute	2000					
2 seconds	2500					
Open Circuit Voltage Test (Volts)	395-485					
Short-Circuit Current Test (Amps)						
Secondary Current	6.40-7.80					
Input Current		1.75-2.65	-	-	-	-

Capacitor: RW1626020 MD2602-100

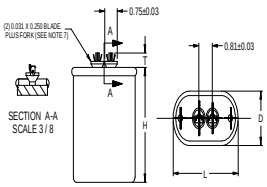

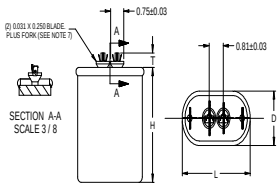

Capacitance:	26	Capacitance:	26
Dia/Oval Dim:	1.75	Dia/Oval Dim:	1.75
Height:	4.25	Height:	5.3
Temp Rating:	90℃	Temp Rating:	90℃

Ignitor: LI571-H5

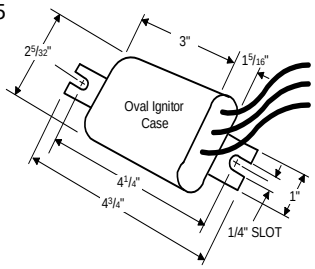

Ballast to Lamp Distance (BTL) = 15 feet
Temp Rating: 105℃

Wiring Diagram:

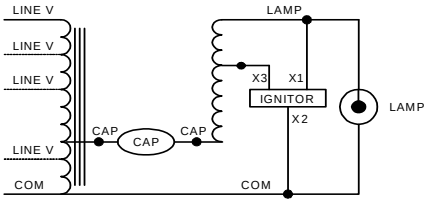

Fig. M

Ordering Information

Order Suffix	Description
500.	Ballast with Ignitor and Oil Filled Capacitor
510.	Ballast w/Welded Bracket, Igniter & Oil-Filled Capacitor

Data is based upon tests performed by Advance Transformer in a controlled environment and representitive of relative performance.
Actual performance can vary depending on operating conditions. Specifications are subject to change without notice.

ADVANCE TRANSFORMER CO.
O'HARE INTERNATIONAL CENTER · 10275 WEST HIGGINS ROAD · ROSEMONT, IL 60018
Customer Support/Technical Service: Phone: 800-372-3331 · Fax: 847-768-7768
Corporate Offices: Phone: 800-322-2086

06/07/11