ADVANCE TRANSFORMER CO.	Metal Halide Lamp Ballast	Catalog Number 71A55A0 For 175/150W M57/M107 60 Hz CWA Status: Active

DIMENSIONS AND DATA

3 X 4 CORE - 2 COIL UNIT

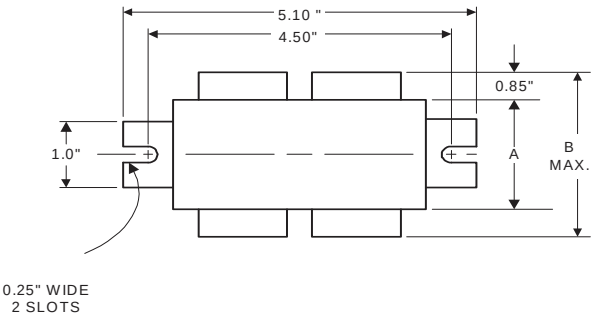

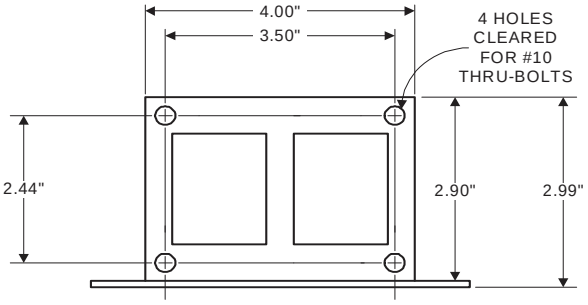

INPUT VOLTS		120	277	347		
CIRCUIT TYPE	CWA					
POWER FACTOR (min)	90%					
REGULATION						
Line Volts	±10%					
Lamp Watts	±10%					
LINE CURRENT (Amps)						
Operating		1.80	0.80	0.62		
Open Circuit		1.91	0.79	0.63		
Starting		0.94	0.41	0.33		
UL TEMPERATURE RATINGS						
Insulation Class	H(180℃)					
Coil Temperature Code	1029	D	D	D		
MIN. AMBIENT STARTING TEMP.	-20℉ or -30℃					
NOM. OPEN CIRCUIT VOLTAGE	306					
INPUT VOLTAGE AT LAMP DROPOUT		55	130	160		
INPUT WATTS	213					
RECOMMENDED FUSE (Amps)		5	2	2		
CORE and COIL						
Dimension (A)	2.41					
Dimension (B)	3.85					
Weight (lbs.)	7					
Lead Lengths	12"					
CAPACITOR REQUIREMENT						
Microfarads	10.0					
Volts (min.)	400					
Fault Current Withstand (amps)						
60 Hz TEST PROCEDURES (Refer to Advance Test Procedure for HID Ballasts - Form 1270)						
High Potential Test (Volts)						
1 minute	0					
2 seconds	2500					
Open Circuit Voltage Test (Volts)	275-337					
Short-Circuit Current Test (Amps)						
Secondary Current	1.54-1.88					
Input Current		0.75-1.13	0.33-0.49	0.26-0.33	-	-

Capacitor: 7C100M40-R

Capacitance:	10
Dia/Oval Dim:	1.45
Height:	3.75
Temp Rating:	105℃

Wiring Diagram:

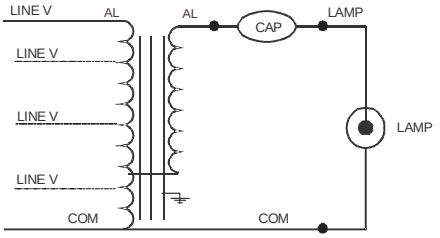

Fig. A6

Ignitor: NA

This ballast does not require the use of an ignitor.

Ordering Information

Order Suffix	Description

Data is based upon tests performed by Advance Transformer in a controlled environment and representitive of relative performance.
Actual performance can vary depending on operating conditions. Specifications are subject to change without notice.

ADVANCE TRANSFORMER CO.
O'HARE INTERNATIONAL CENTER · 10275 WEST HIGGINS ROAD · ROSEMONT, IL 60018
Customer Support/Technical Service: Phone: 800-372-3331 · Fax: 847-768-7768
Corporate Offices: Phone: 800-322-2086

01/11/13