PHILIPS

www.philips.com

High frequency communication through power coils

Aleksei Agafonov, Will Ettes & Bert op het Veld
Philips
10.12.2019

innovation + you

Public

NGC-TF recap

Requirement	Current In-band	BLE	NFC	Slotted NFC	??
Range of communication is ≥ power transfer distance	No risk	No risk	No risk	No risk	
No interference with non-Qi systems	No risk	No risk	No risk	No risk	
No Interference with multiple Qi systems in the same room	No risk	No risk	No risk	No risk	
High bandwidth (Auth. transport time < 200ms)	FSK 200 bps ASK 2000 bps	No risk	No risk	No risk	
Low power consumption	No risk	No risk	No risk	No risk	
Worldwide regulatory approval	Unclear	No risk	No risk	No risk	
Unambiguous control of power signal	No risk	In-band localization	No risk	No risk	
No interference with power signal (up to 100W)	No power regulation during communication	No risk	<60 W, require modifications	Slots are essential	
Low latency - 10ms (TBD)	No real time adaptation	≤ 50ms	No risk	No risk	
Future extensibility - Support future multi-RX systems	Qi shared mode	No risk	Complicated antenna	Complicated antenna	

Possibilities to improve current in-band communication channel are limited.

- In-band communication shall be supported by both PC0 and PC1
- Limited possibilities of power carrier modulation
- Increasing current in-band bandwidth limited to 4-5 kbps
- Uncontested load modulation not possible during load change
- Modulation of higher power carrier results in higher EM disturbance

- Alternative: **second frequency dedicated for communication**

The principle – second carrier communication (PRx to PTx)

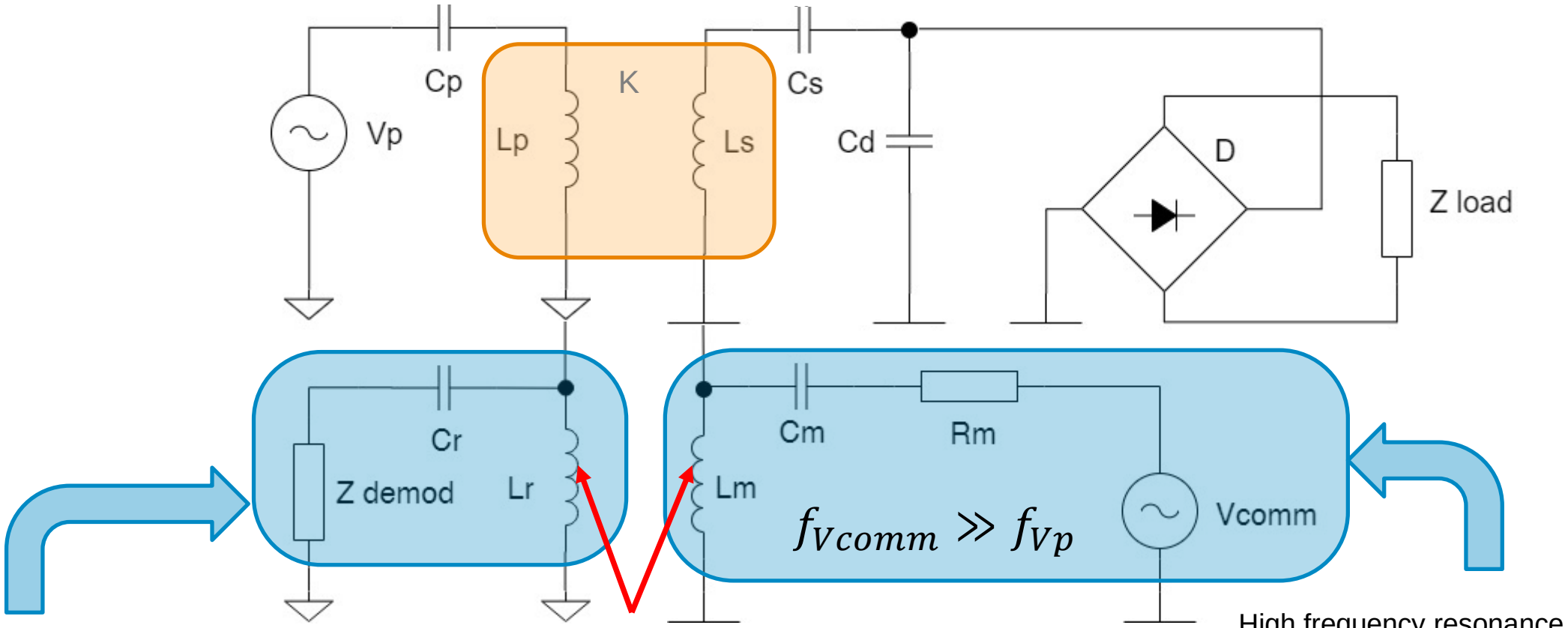

High frequency resonance

High frequency resonance

Not coupled inductors

$$Lr \ll Lp$$
$$Cr \ll Cp$$
$$K(Lr, Lp) = 0$$
$$K(Lr, Lm) = 0$$

Bidirectional

$$Lm \ll Ls$$
$$Cm \ll Cs$$
$$K(Lm, Ls) = 0$$
$$K(Lm, Lp) = 0$$

Test setup High frequency communication system

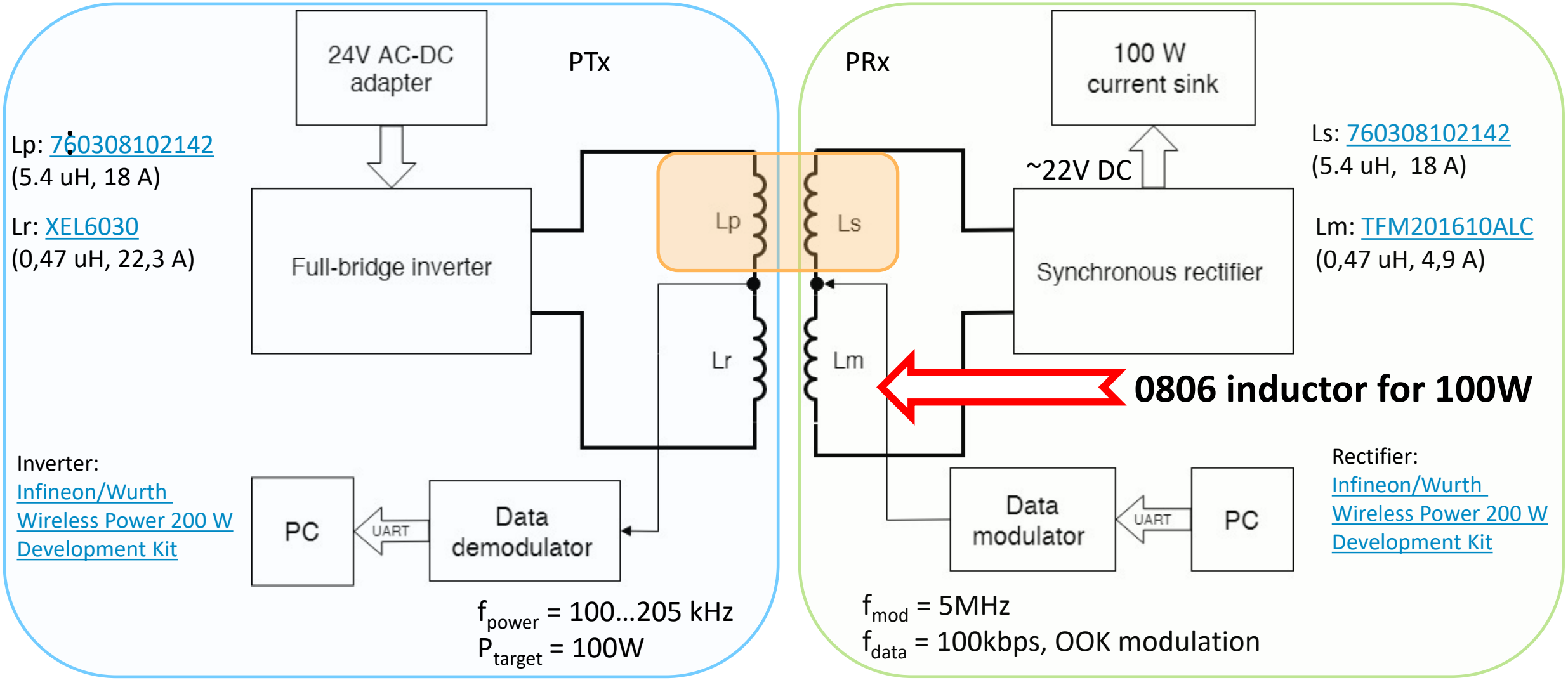

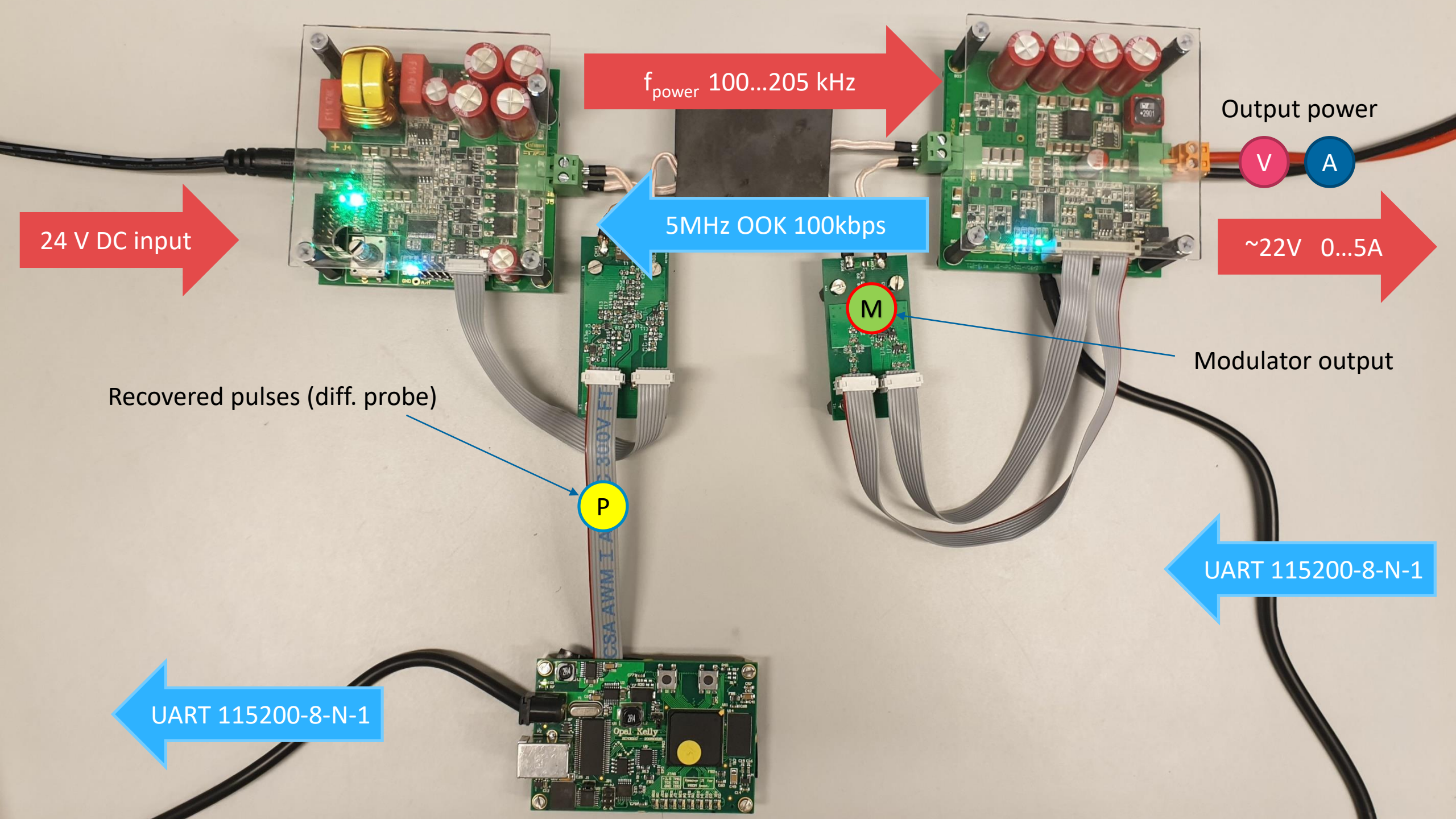
f_{power} 100...205 kHz
Output power
V
A
24 V DC input
5MHz OOK 100kbps
~22V 0...5A
M
Modulator output
Recovered pulses (diff. probe)
P
UART 115200-8-N-1
UART 115200-8-N-1

High frequency carrier communication – waveforms

Modulator output (5MHz carrier)

Recovered pulses (demodulator)

Load current

Load voltage

Load power

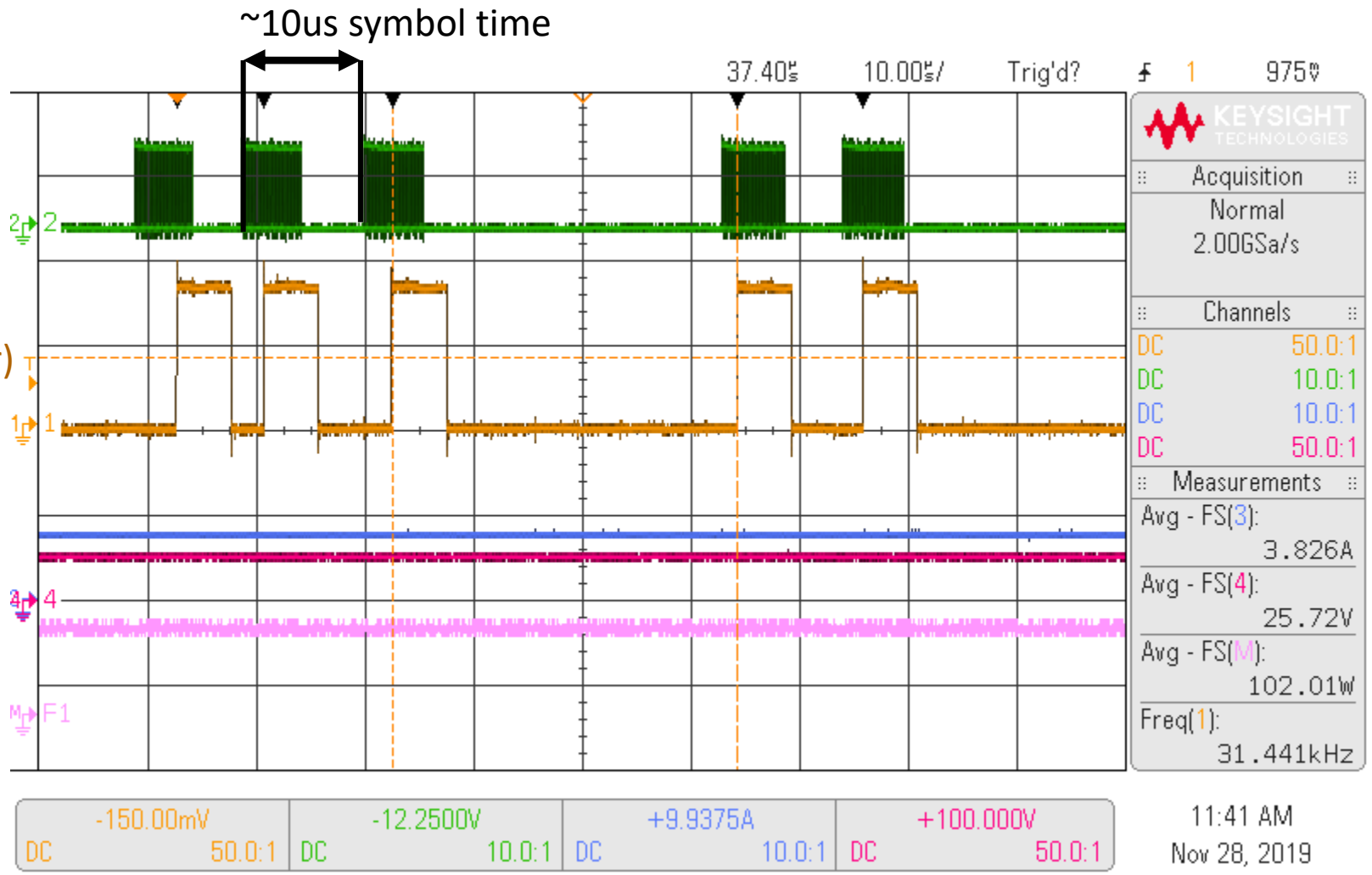

High frequency carrier communication – waveforms

Modulator output (5MHz carrier)

Recovered pulses (demodulator)

Load current

Load voltage

Load power

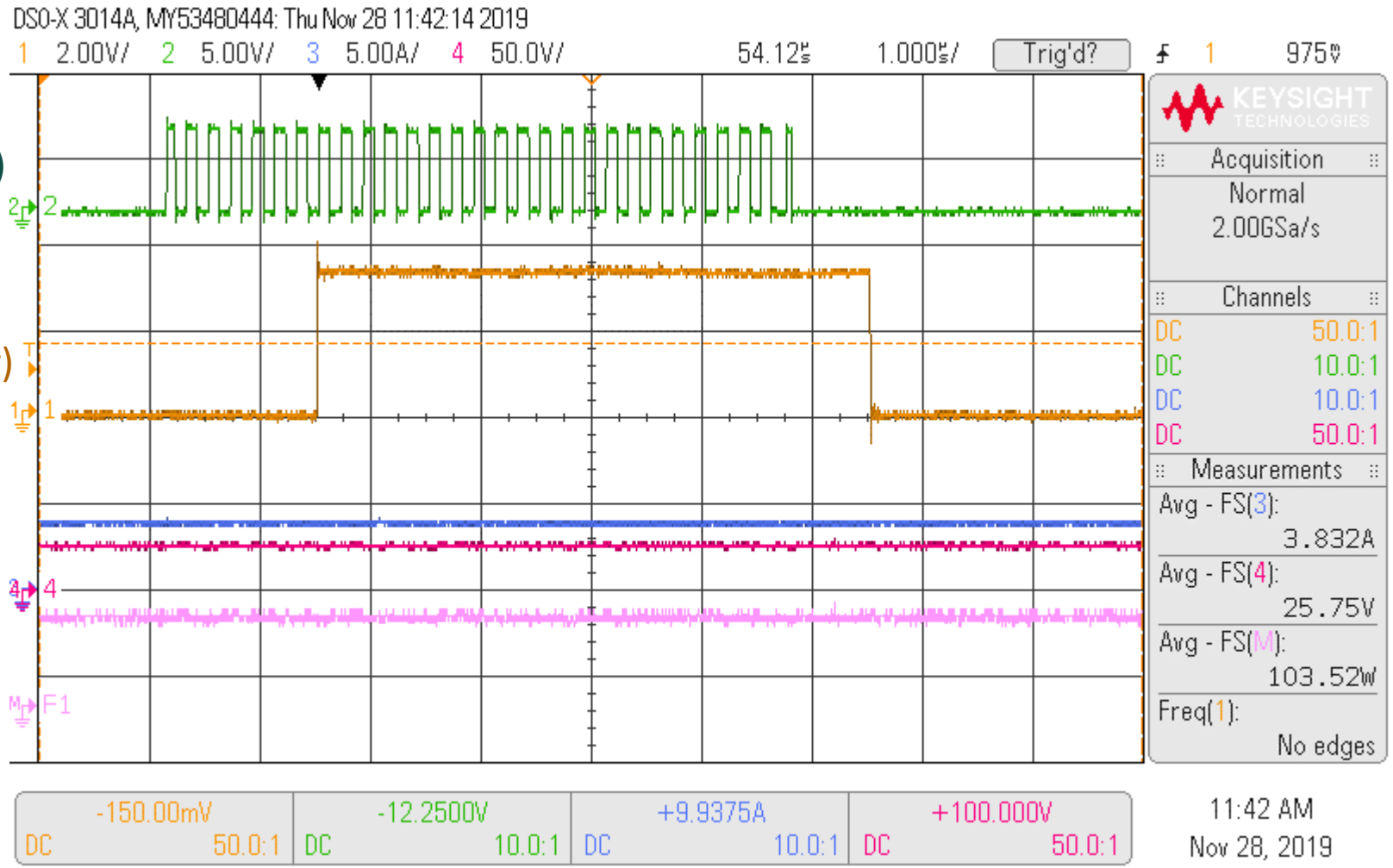

Summary

There is an **alternative communication method** through power coils:

- High throughput: **up to 100 kbps** communication speed, low (<100us) latency
- Exist in operating area of the power transfer
- **Coexistent with power transfer**
- Half-duplex communication possible
- No communication black holes
- BOM cost for implementation comparable to existing In Band
- Backward compatibility with Qi load modulation possible (more details @WPC2001)

Back to requirements

Requirement	Current In-band	BLE	NFC	Slotted NFC	“NEW” in-band
Range of communication is ≥ power transfer distance					Communication range is equivalent to power transfer distance 1:1 coupling
No interference with non-Qi systems					Low EM field disturbance
No Interference with multiple Qi systems in the same room					Communication range is equivalent to power transfer distance 1:1 coupling
High bandwidth (Auth transport time < 200ms)					Up to 100 kbps data rate is possible
Low power consumption					TBC (to be confirmed)
Worldwide regulatory approval					TBC (to be confirmed)
Unambiguous control of power signal					No issues: Communication range is equivalent to power transfer distance 1:1 coupling
No interference with power signal (up to 100W)					Demonstrated
Low latency - 10ms (TBD)					Hi throughput in combination with no interference with power signal
Future extensibility - Support future multi-RX systems					In a manner of Qi shared mode

Proposal for WPC

We propose presented communication method as

a new NGC-TF candidate

to replace FSK, AKS or both for high power level systems

PHILIPS