PHILIPS

www.philips.com

Slotted FOD during Power Transfer using a triple Induction Balance for the hidden case

Will Ettes, Pascal Lebens, Klaas Lulofs, Friso Rietstra & Jan Draak

Philips Research

Eindhoven, The Netherlands

10 -12 - 2019

innovation + you

Content of the presentation

- Induction Balance principle
- From WPC 1602: “FOD during power transfer” from Haier
- From WPC 1701: “FOD during power transfer” from Philips
- Updated proposal “FOD during Power Transfer 2”
  - Triple Induction Balance set-up
  - FOD coil multiplexer
  - Standard Power Chain for cordless kitchen with NFC slots
  - Modified Power Chain with NFC & FOD slots
  - FOD coil multiplexer and offset nulling
- Conclusion (proposal)

Induction Balance Principle

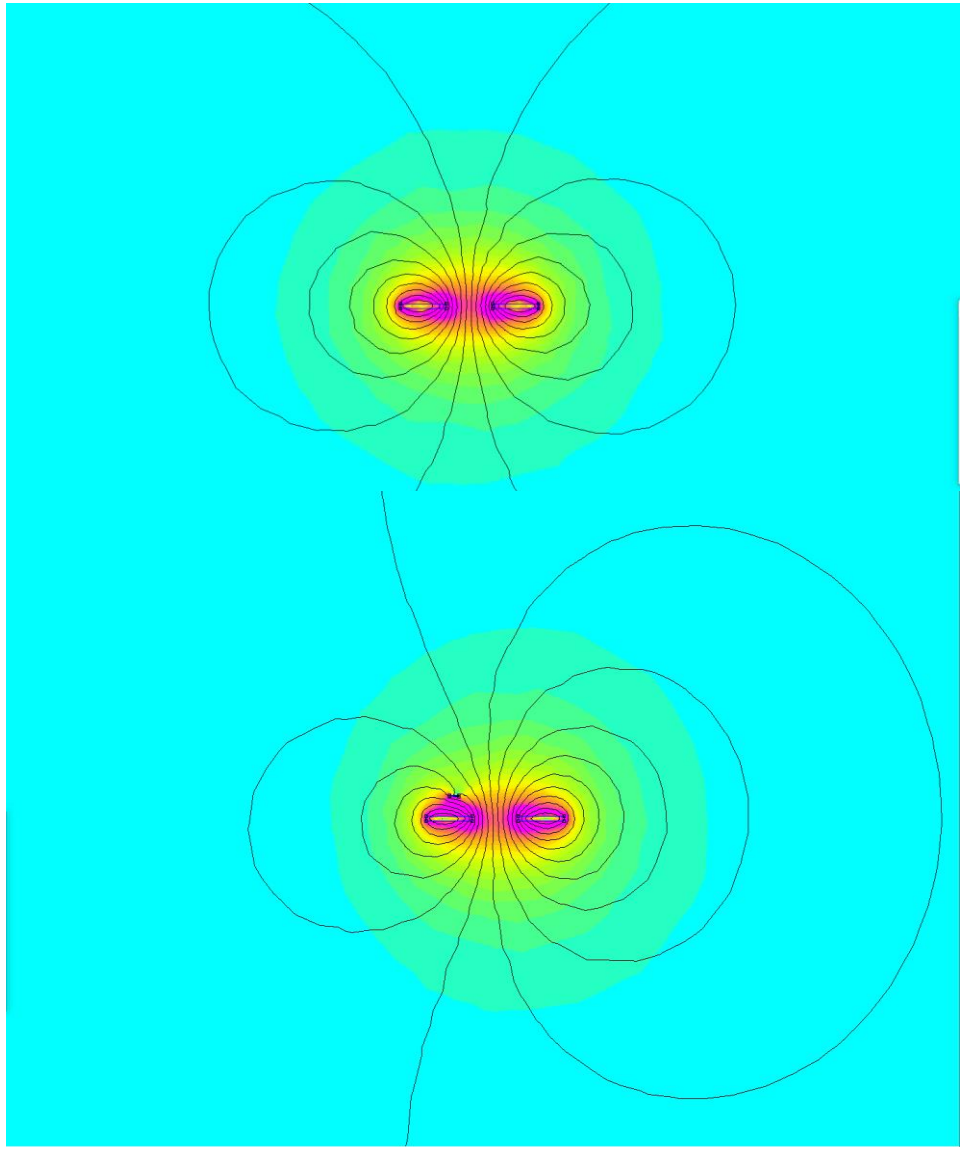

- Main magnetic field created by Tx coil
- Flux lines are bended due to the foreign object because:
  - Local change of permeability
  - Eddy currents induced in the Foreign Object
- Difference in flux density can measured by an Induction Balance

PHILIPS

From WPC 1602 (Tokyo)

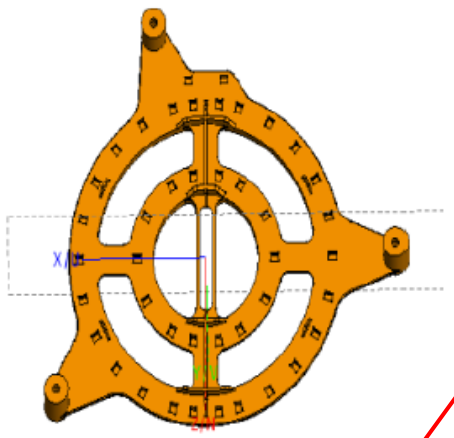

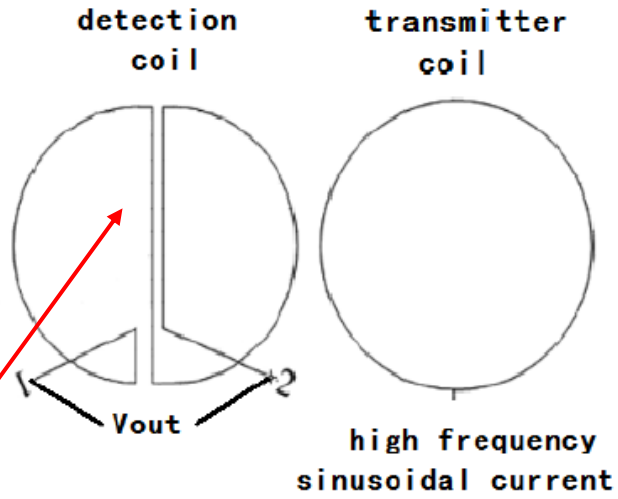

center line

Proposal from Haier:

- FOD during Power Transfer using an Induction Balance

Open Issues:

- Dead detection zone near center line
- Offset voltage on V_{out} larger than detection voltage U_{fod} due to asymmetries

For an Iron disk 10mm x 2mm @ 20mm Z distance:

$V_{out} = V_{offset} + U_{fod} = 1.39\ V + 0.10\ V = 1.49V$

PHILIPS

From WPC 1701 (London)

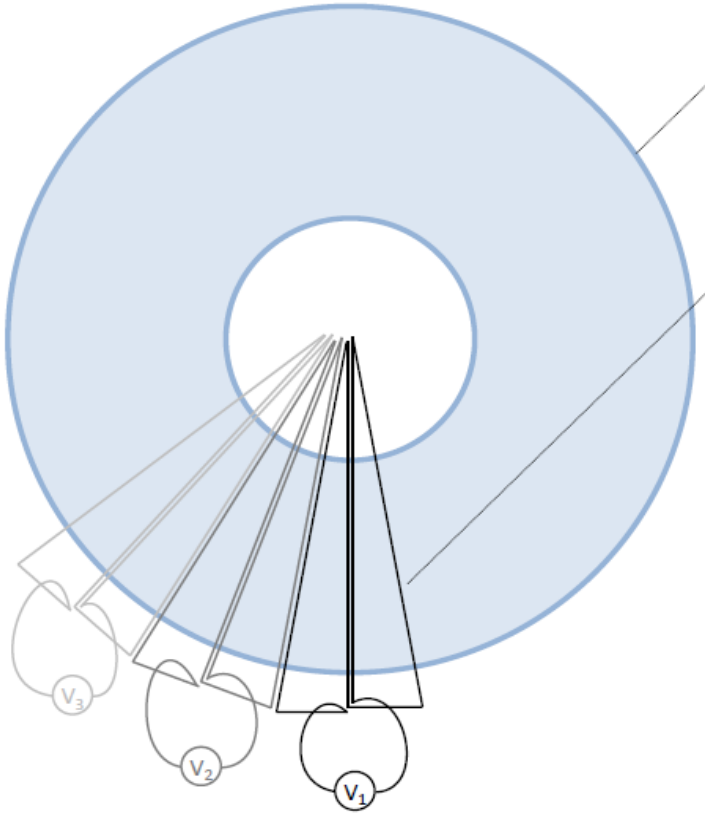

Proposal from Philips (1)

- FOD during Power Transfer using **multiple Wedge-shaped** Induction Balances
- No dead zones and size & position of multiple FO's can be estimated

Open issues:

- Offset voltage on $V_{1,2,3,n}$ still larger than the detection voltage U_{Fod} due to a-symmetries
- Noise pick-up due to complex wiring
- Proven for a single 400 W received load

PHILIPS

Updated proposal: “FOD during Power Transfer 2”

- Triple Induction Balance layout
- FOD coil multiplexer
- Standard Power Chain for cordless kitchen
- Standard Power Chain with NFC slots
- Modified Power Chain for cordless kitchen
- Modified Power Chain with NFC & FOD slots
- FOD coil multiplexer and Offset nulling
- Triple Induction Balance FOD system

Triple Induction Balance set-up (1)

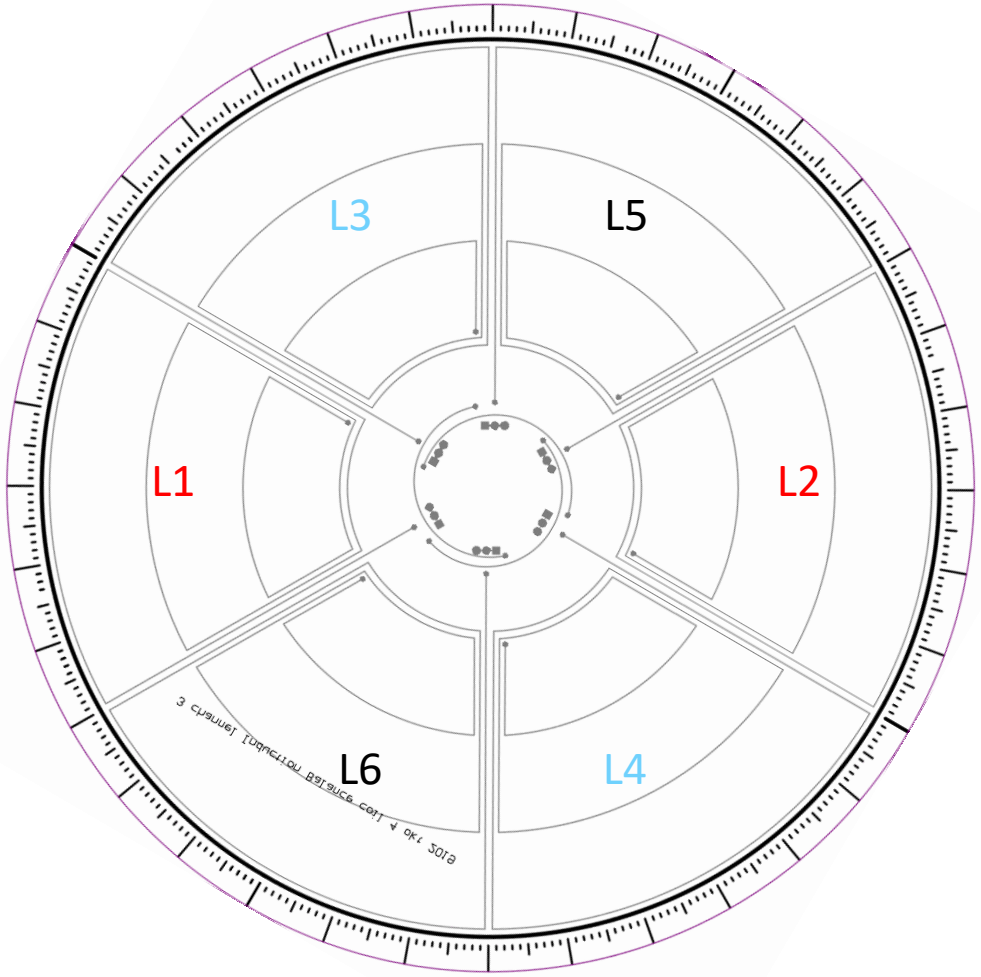

To avoid noise pick-up and a-symmetry:

- Terminals of FO detection coils L_1 to L_6 moved to centre of the Tx coil
- The current through the FO detection coils is measured, not the voltage across the terminals

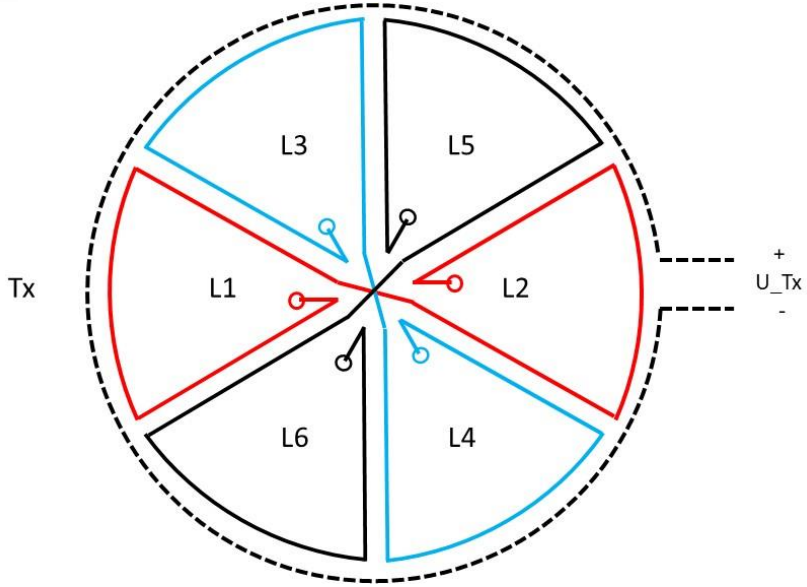

PHILIPS

Triple Induction Balance set-up (2)

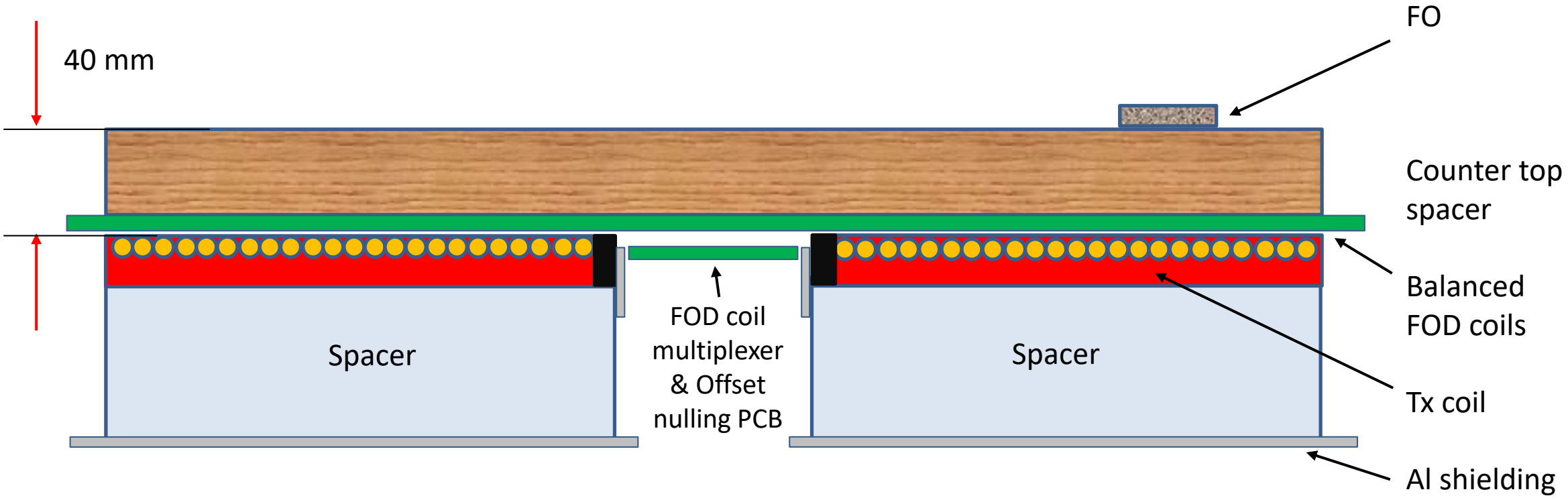

PHILIPS

Triple Induction Balance set-up (3)

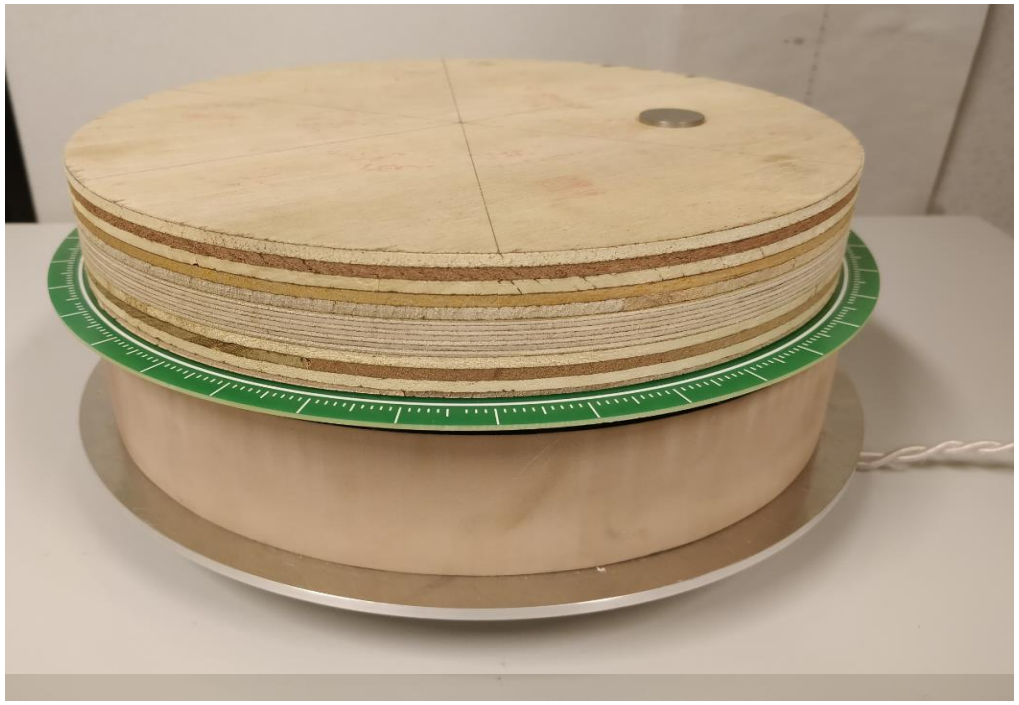

- Spiral Tx coil
- Ferrite ring and aluminium tube in the centre of the Tx coil for shielding
- Spacer & Aluminium shielding disk

- 40 mm wooden “counter top” spacer
- Triple Induction Balanced PCB coils on top of Tx coil

PHILIPS

FOD coil multiplexer

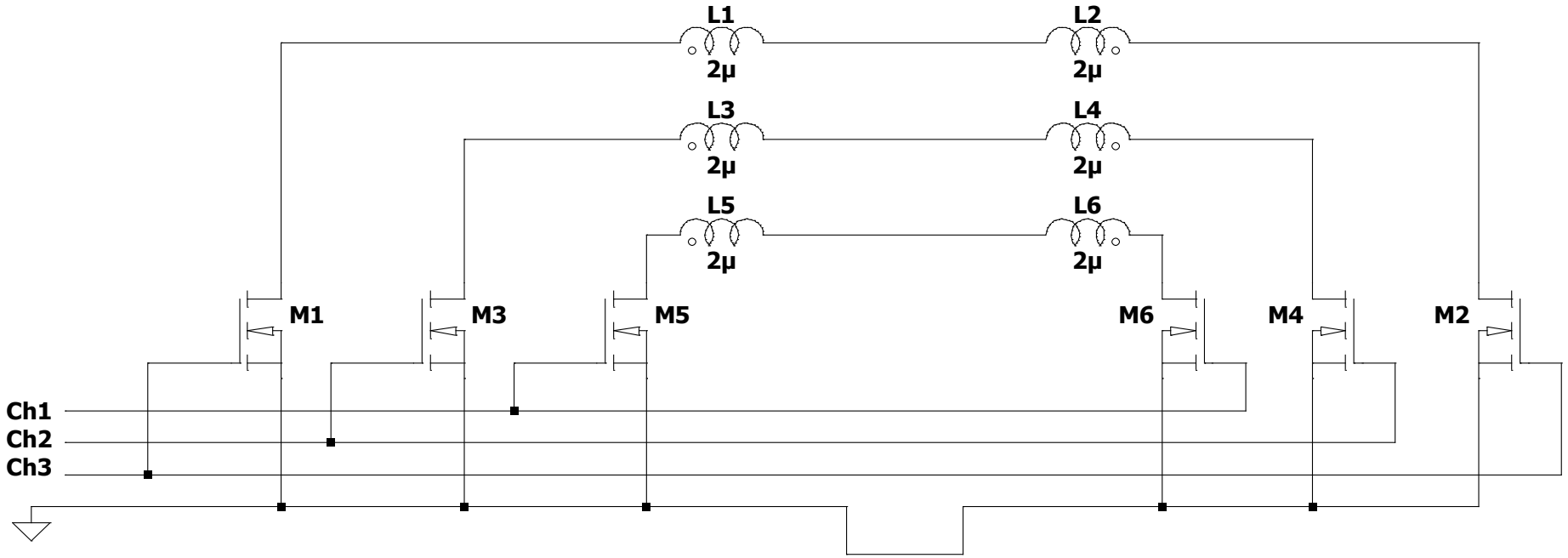

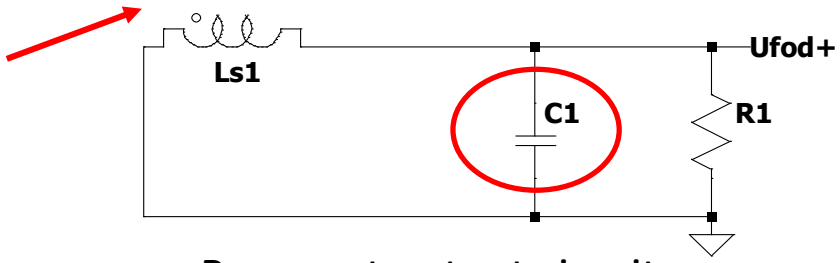

Current through the FO detection coil pairs L_1/L_2 , L_3/L_4 & L_5/L_6 is measured sequentially by means of **single** current transformer Ls1 and a 3-channel multiplexer ($M_{1,2}$,$M_{3,4}$ & $M_{5,6}$)

Resonant output circuit

PHILIPS

Standard Power Chain for cordless kitchen

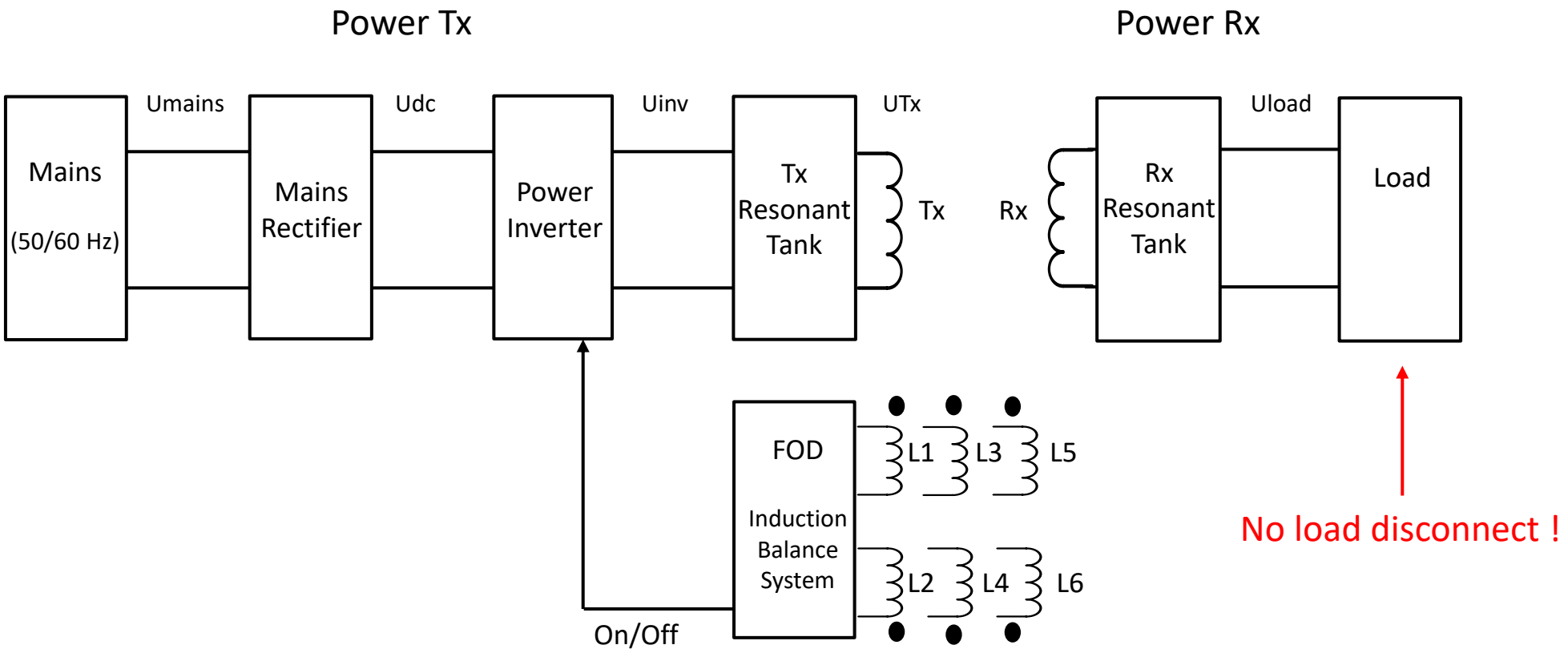

PHILIPS

Standard Power Chain with NFC slots

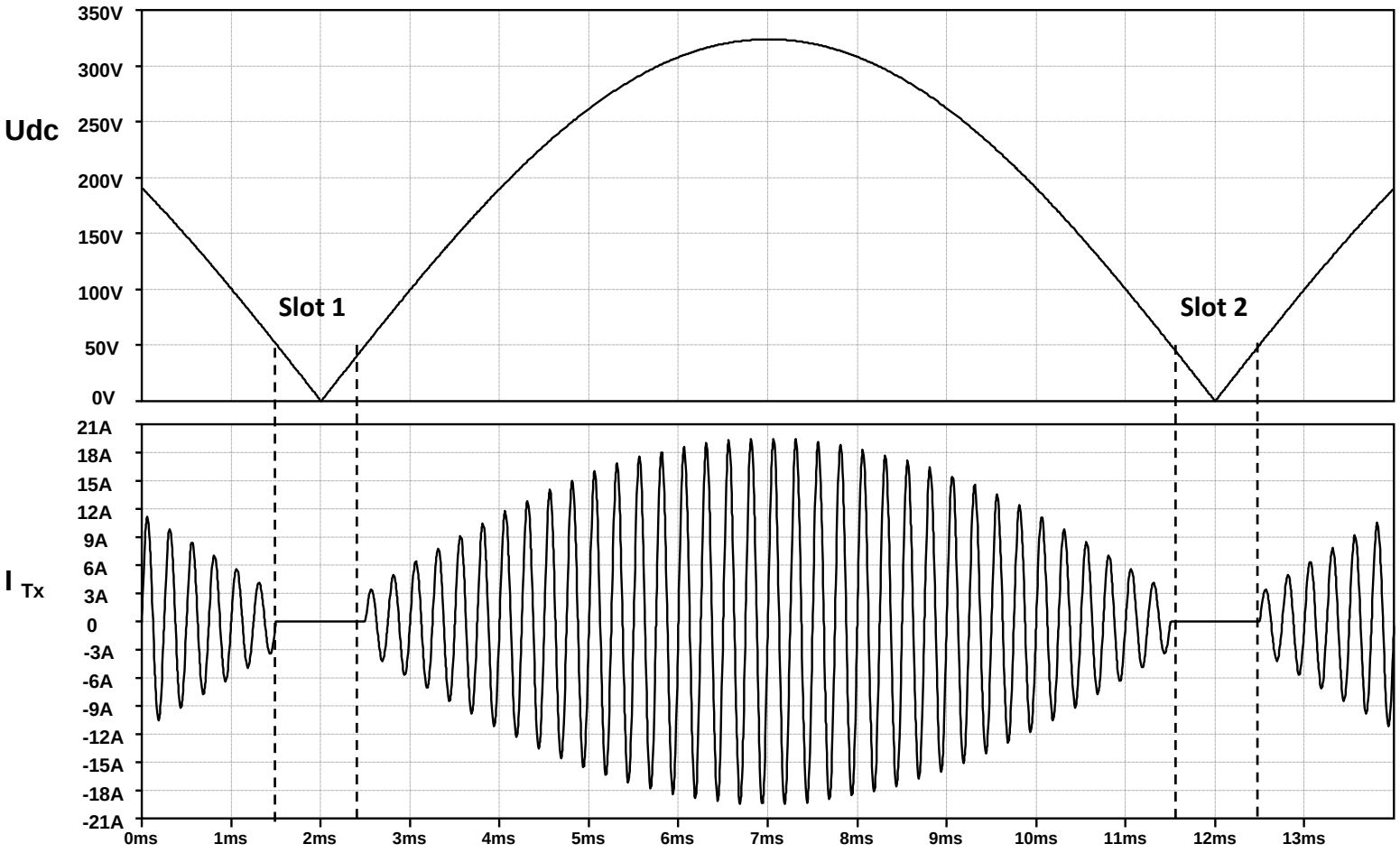

Outside slot 1 & slot 2:

- Inverter is active: operating frequency Fop = 22 – 35 kHz

During slot 1 & slot 2:

- Inverter is switched Off, no power transfer takes place
- Both slots used for Near Field Communication (NFC)
- The load in PRx is not (actively) disconnected

PHILIPS

Modified Power Chain for cordless kitchen

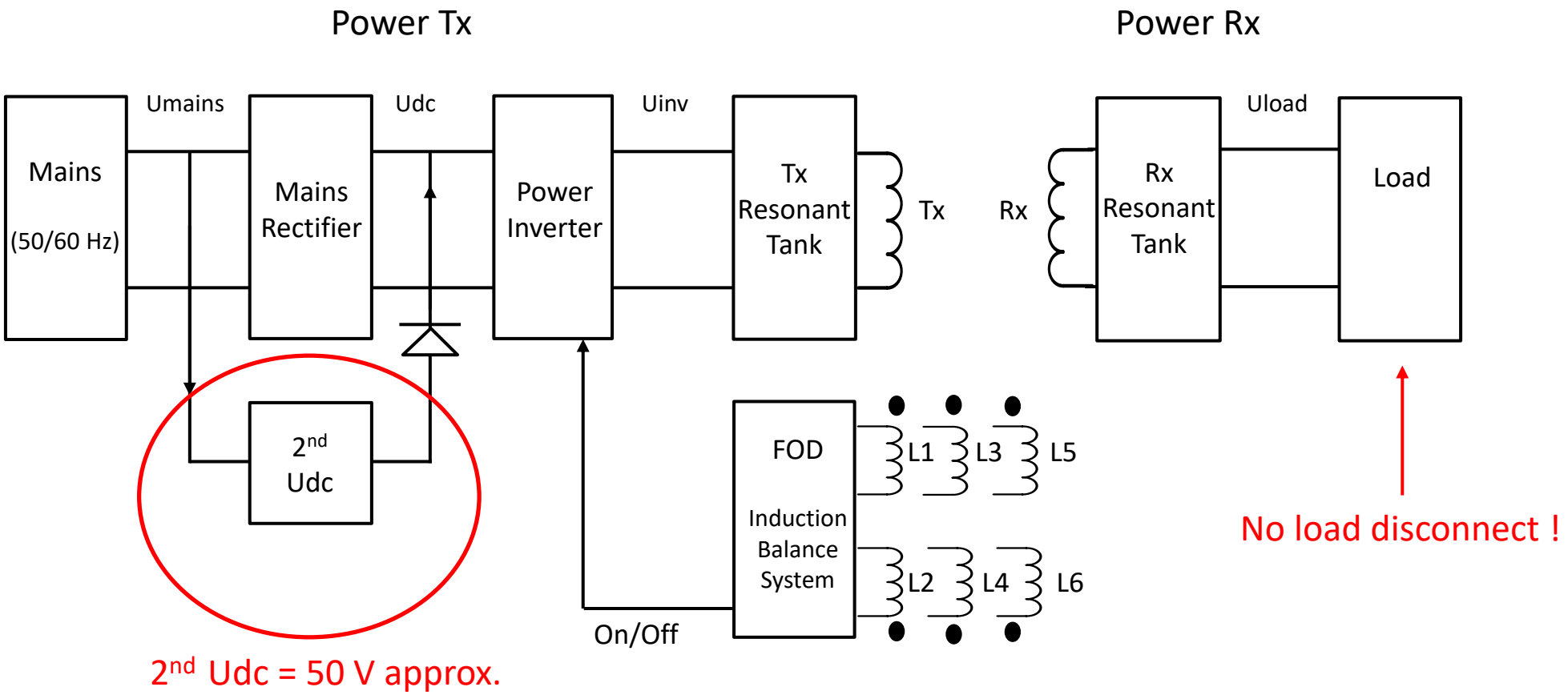

PHILIPS

Modified Power Chain with NFC & FOD slots

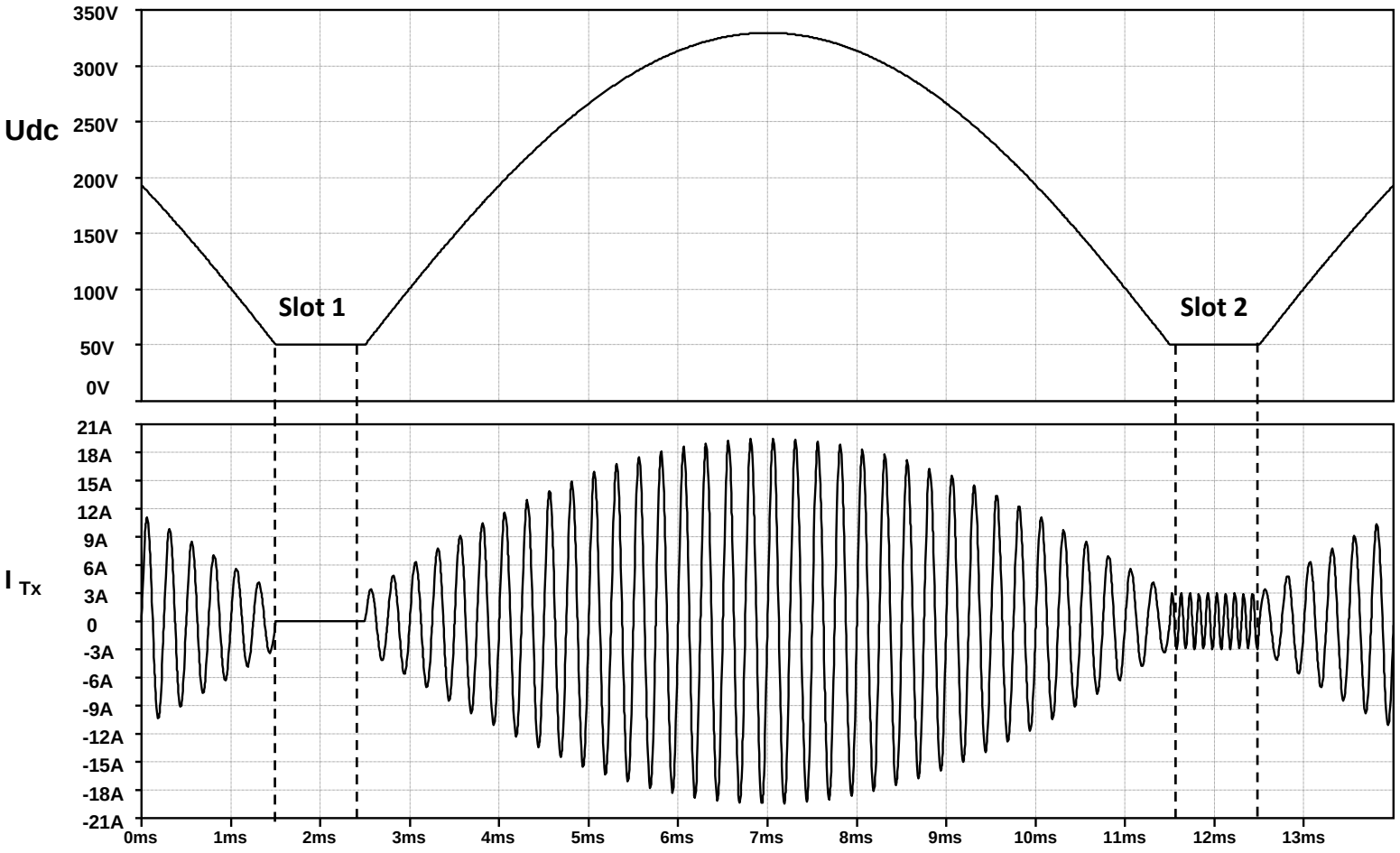

During slot 1:

- Inverter is switched Off, no power transfer takes place
- Slot 1 is used for NFC

During slot 2:

- With 2nd Udc a detection field is generated to enable FOD
- The load in PRx is not (actively) disconnected -> F_{op} increased to 50 kHz to reduce the effect of the load (I_{Tx} = 6 A_{pp})

PHILIPS

FOD coil multiplexer & Offset nuller

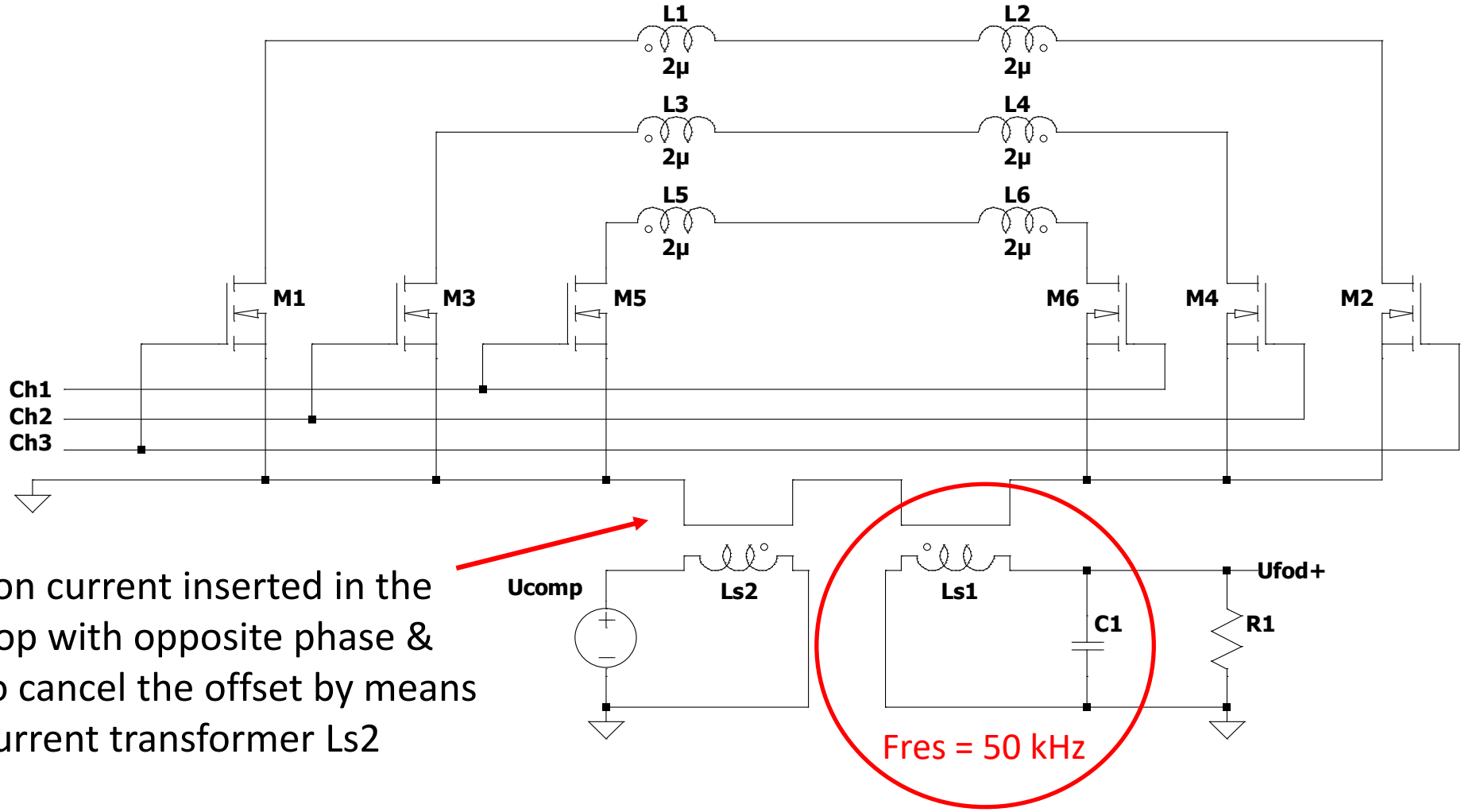

Compensation current inserted in the detection loop with opposite phase & amplitude to cancel the offset by means of a **single** current transformer Ls2

PHILIPS

Triple Induction Balance System overview

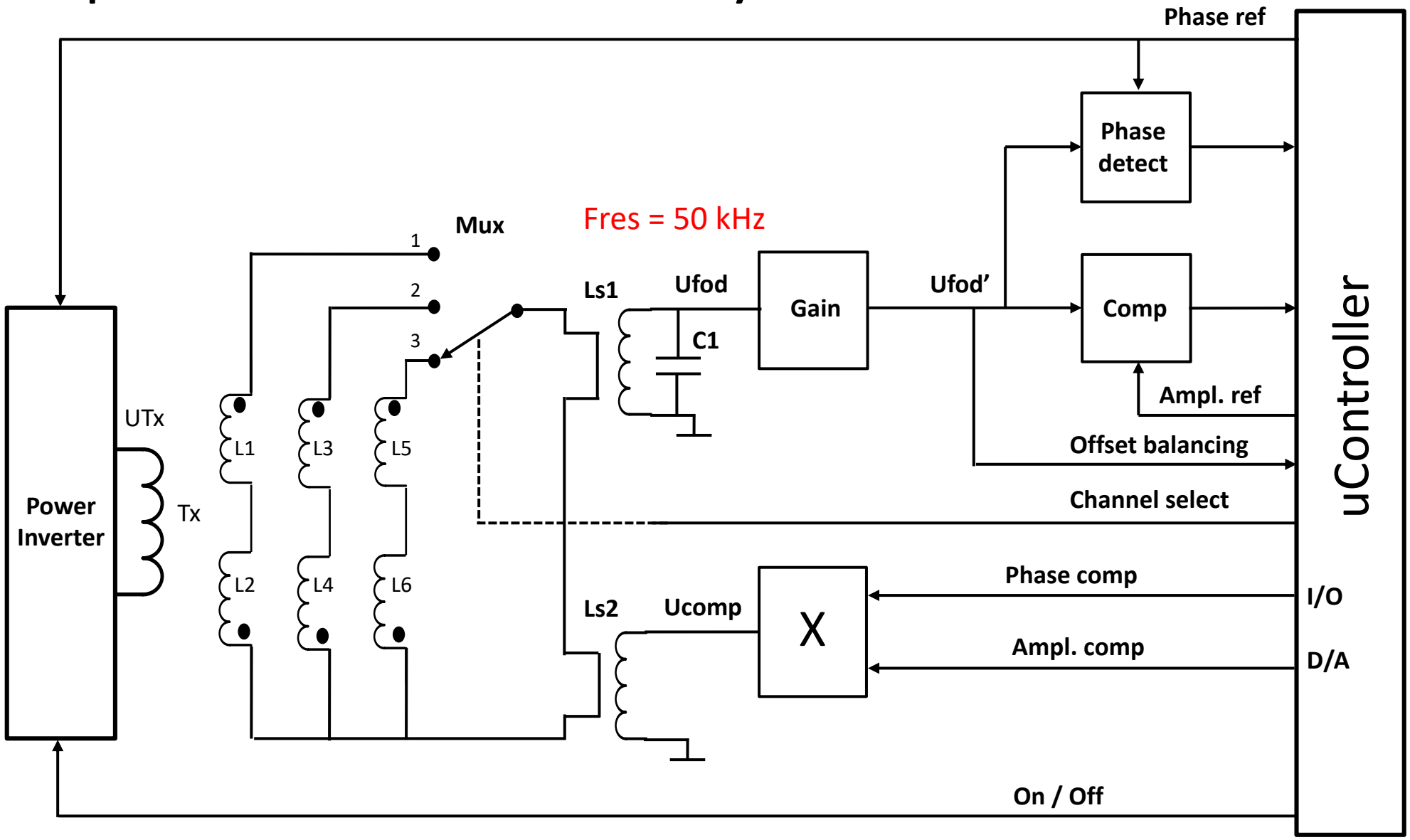

PHILIPS

Experimental results (1)

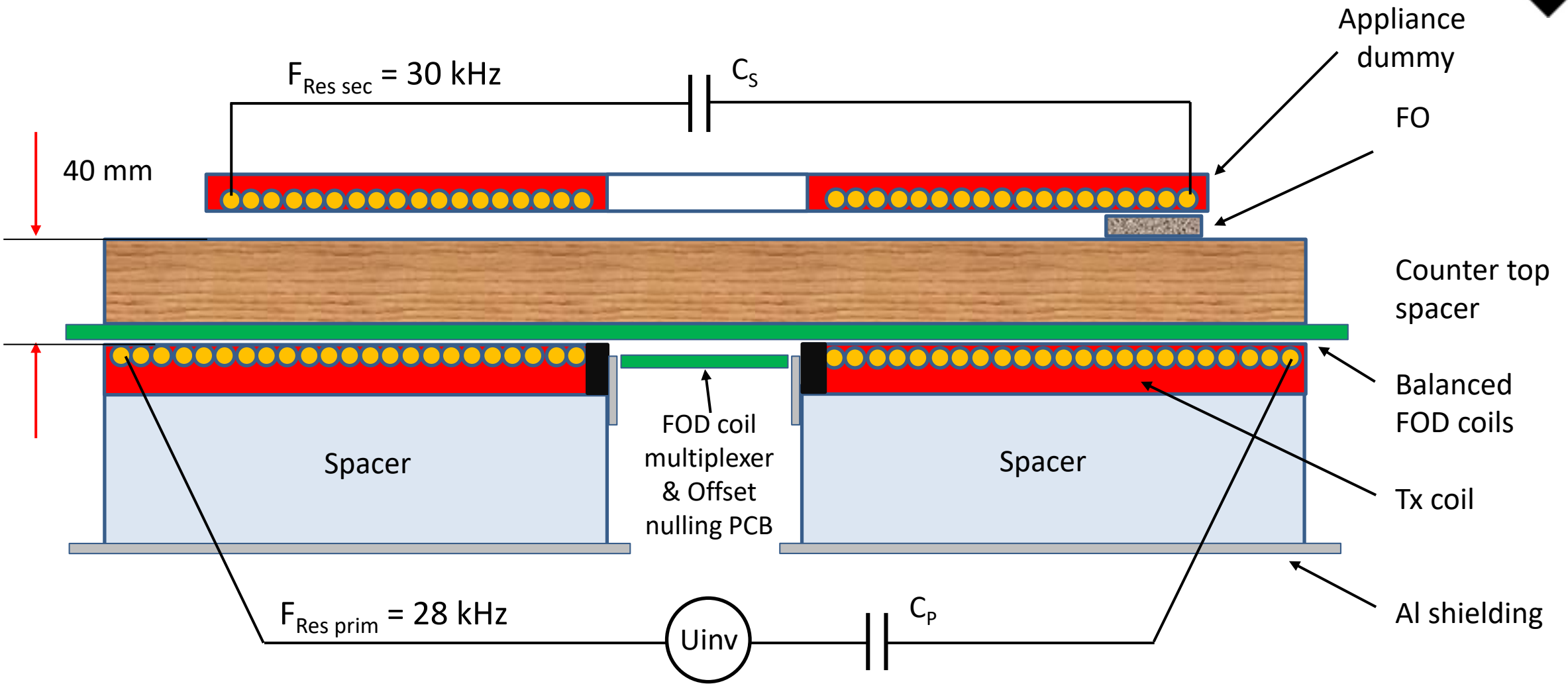

F_{op} = 50 kHz , U^{2nd} = 50 V, I_{Tx} = 6 A_{PP}

PHILIPS

Experimental results (2)

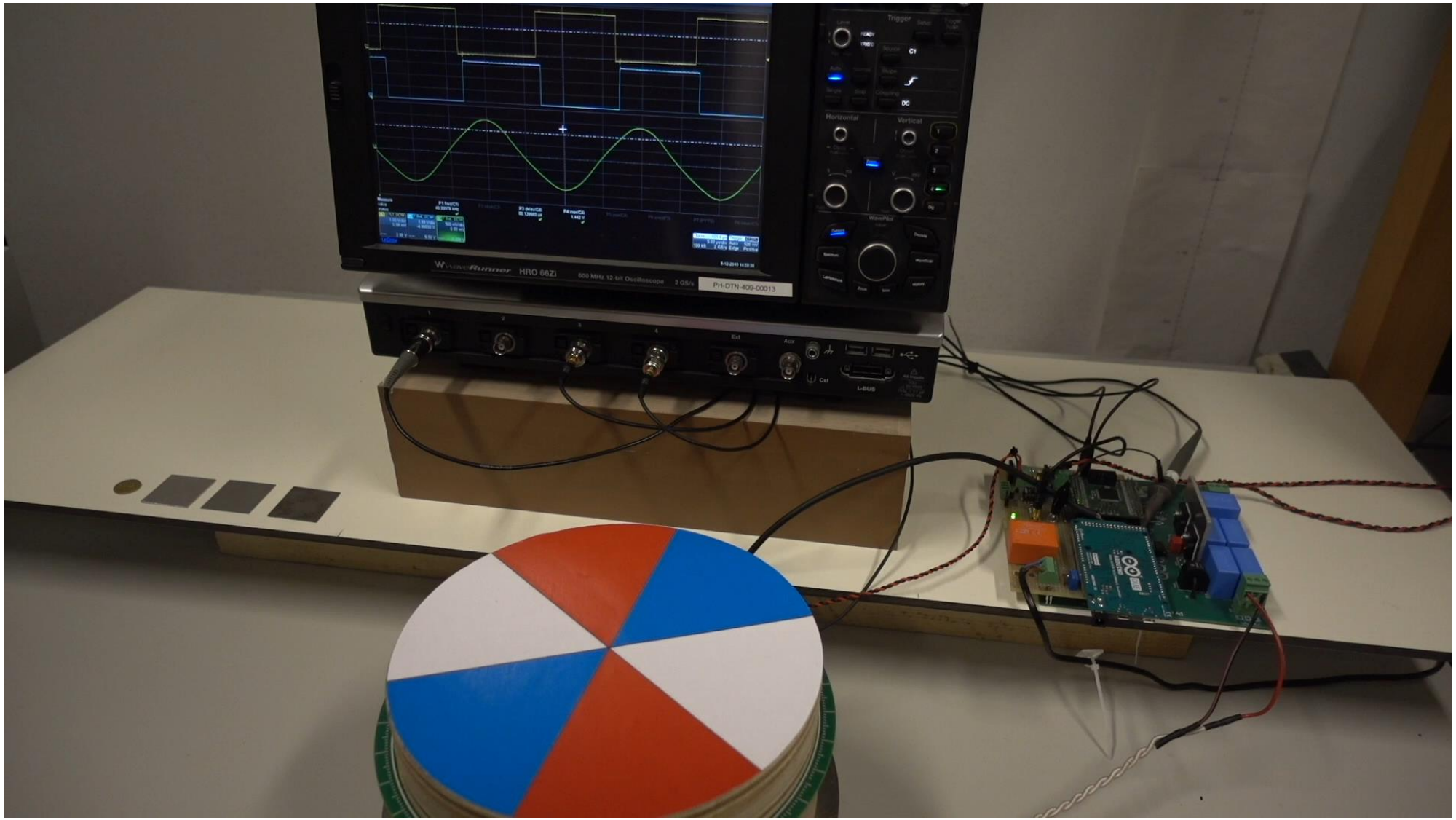

PHILIPS

Triple Induction Balance System detail

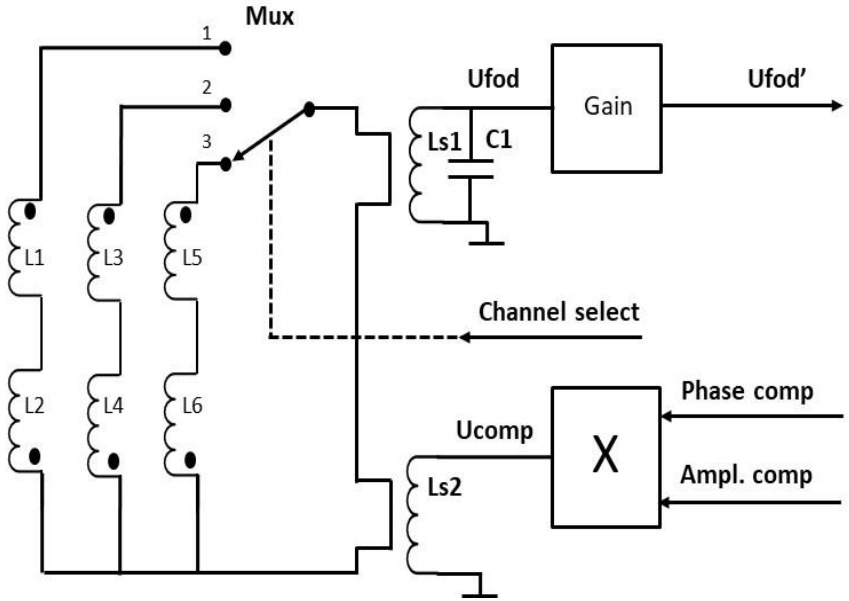

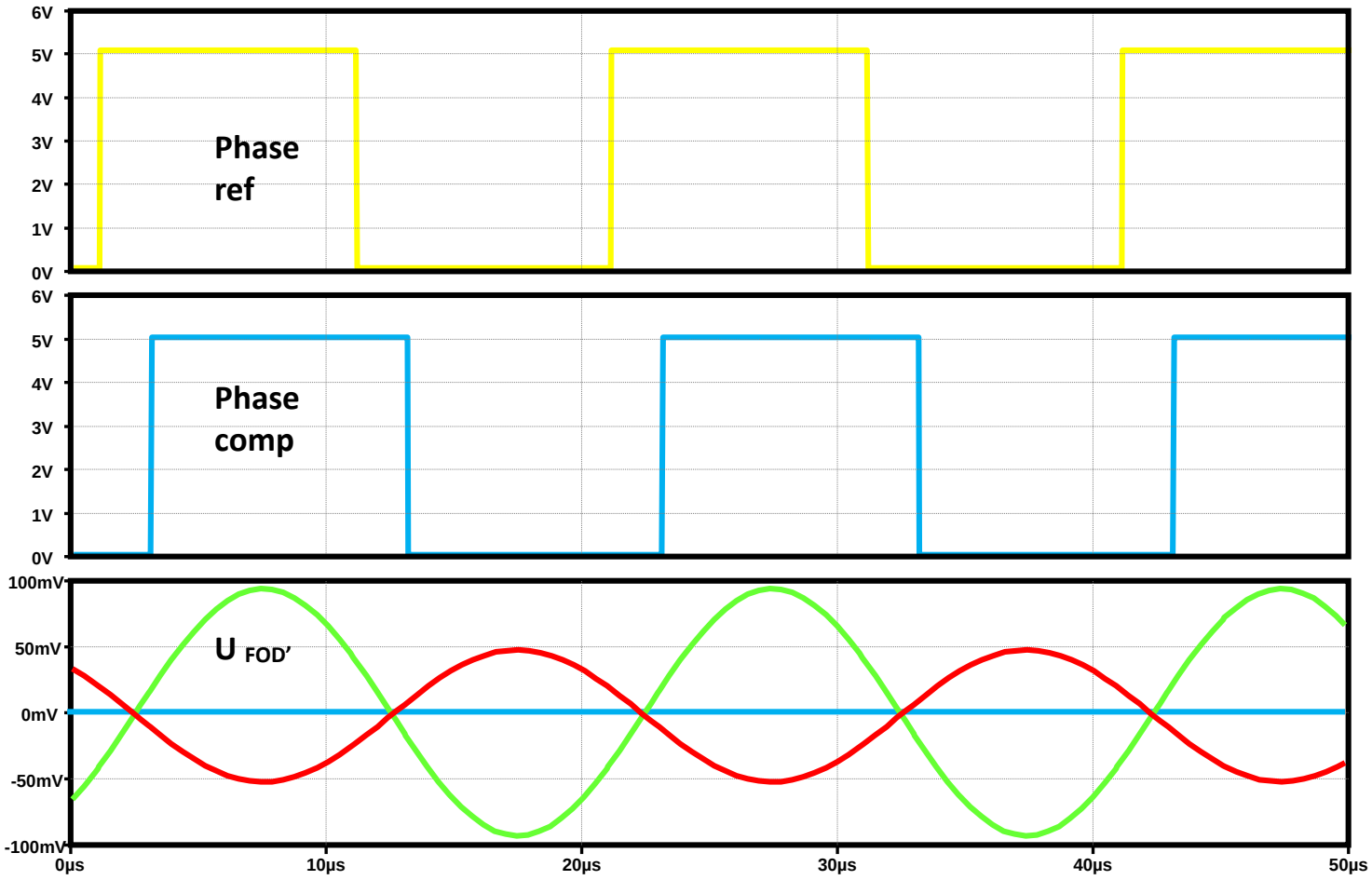

Offset nulled / compensated

PHILIPS

Detection outside the active FOD coil pair (1)

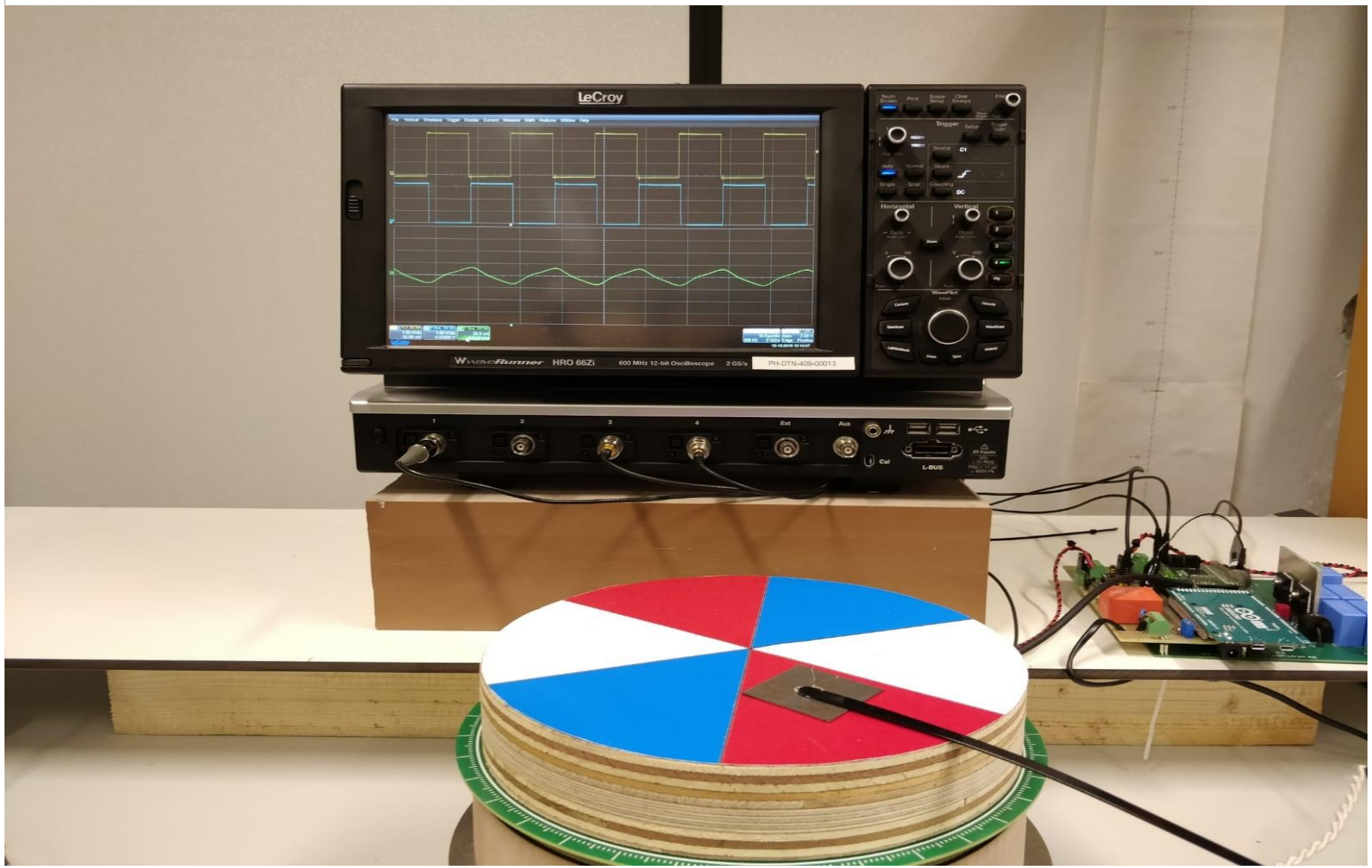

PHILIPS

Detection outside the active FOD coil pair (2)

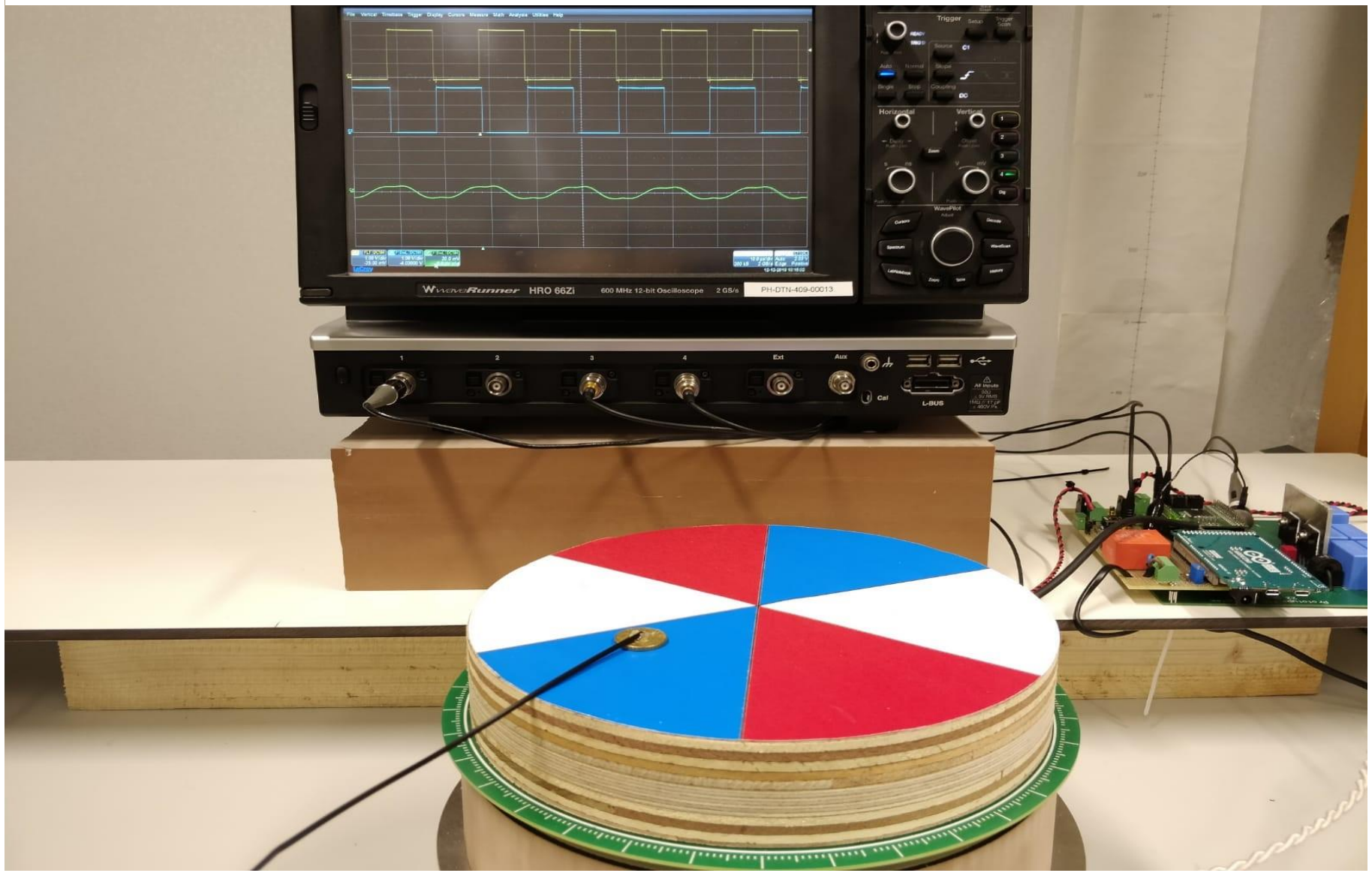

PHILIPS

Conclusion

- Philips introduced a FOD method, based on the Induction Balance (IB) principle, that utilizes the FOD slots
- The FOD slot repetition rate can be negotiated to alternate with the communications slots as described in the joint specification
- The FOD coils and the NFC antenna can be combined on a single PCB

Proposal

- To add the induction balance FOD method as a supported FOD method in the (joint) spec.

PHILIPS