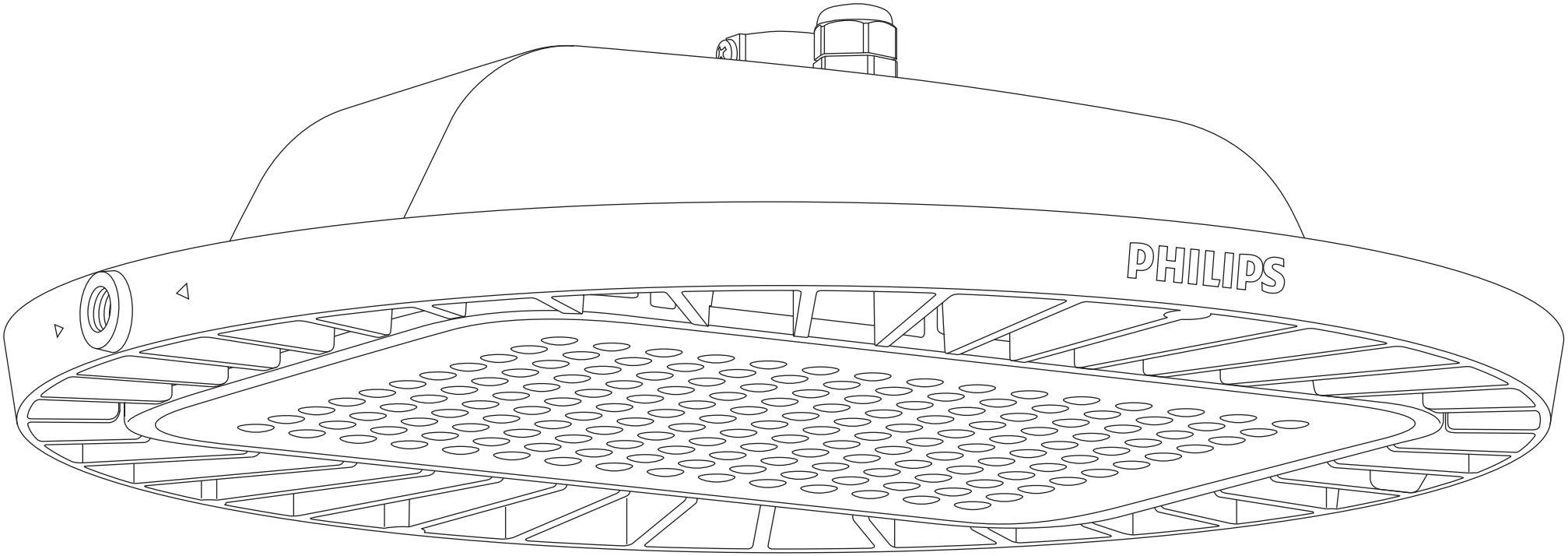
PHILIPS